OPERATORS MANUAL

GW-15t-1

GRAVITY WAGON

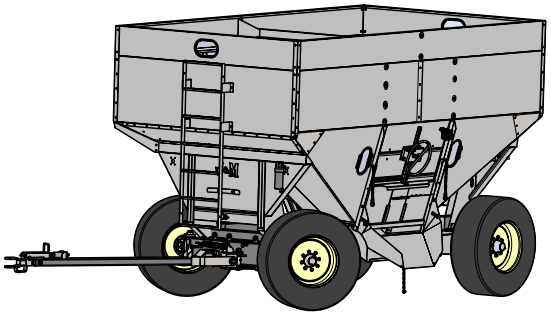

Rev. 8.21.2014

J. & M. Mfg. Co., Inc.
284 Railroad Street - P.O. Box 547
Fort Recovery, OH 45846
Ph: (419) 375-2376 Fax: (419) 375-2708
www.jm-inc.com

To The Dealer

Read manual instructions and safety rules. Make sure all items on the Dealer's Pre-Delivery and Delivery Check Lists are completed before releasing equipment to the owner.
The dealer must complete the Warranty Registration found on the Dealer Portal website located at dealer.jm-inc.com and return it to J. & M. Mfg. Co., Inc. at the address indicated on the form. Warranty claims will be denied if the Warranty Registration has not been submitted.

EXPRESS WARRANTY:

J. & M. Mfg. Co. Inc. warrants against defects in construction or materials for a period of ONE year. We reserve the right to inspect and decide whether material or construction was faulty or whether abuse or accident voids our guarantee.

Warranty service must be performed by a dealer or service center authorized by J. & M. Mfg. Co., Inc. to sell and/or service the type of product involved, which will use only new or remanufactured parts or components furnished by J. & M. Mfg. Co., Inc. Warranty service will be performed without charge to the purchaser for parts or labor based on the Warranty Labor Times schedule. Under no circumstance will allowable labor times extend beyond the maximum hours indicated in the Warranty Labor Times schedule for each warranty procedure. The purchaser will be responsible, however, for any service call and/or transportation of the product to and from the dealer or service center's place of business, for any premium charged for overtime labor requested by the purchaser, and for any service and/or maintenance not directly related to any defect covered under the warranty. Costs associated with equipment rental, product down time, or product disposal are not warrantable and will not be accepted under any circumstance.

Each warranty term begins on the date of product delivery to the purchaser. Under no circumstance will warranty be approved unless (i) the product warranty registration card (attached to the inside of the Operator's Manual) has been properly completed and submitted to the equipment manufacturer, and (ii) a warranty authorization number has been issued by the equipment manufacturer. This Warranty is effective only if the warranty registration card is returned within 30 days of purchase.

This warranty does not cover a component which fails, malfunctions, or is damaged as a result of (i) improper modification or repair, (ii) accident, abuse or improper use, (iii) improper or insufficient maintenance, or (iv) normal wear or tear. This warranty does not cover products that are previously owned and extends solely to the original purchaser of the product. Should the original purchaser sell or otherwise transfer this product to a third party, this implied, with respect to tires or other parts or accessories not manufactured by J. & M. Mfg. Co., Inc. Warranties for these items, if any, are provided separately by their respective manufacturers.

THIS WARRANTY IS EXPRESSLY IN LIEU OF ALL OTHER WARRANTIES OR CONDITIONS, EXPRESS, IMPLIED OR STATUTORY, INCLUDING ANY IMPLIED WARRANTY OF MERCHANTABILITY OR FITNESS FOR PARTICULAR PURPOSE.

In no event shall J. & M. Mfg. Co., Inc. be liable for special, direct, incidental or consequential damages of any kind. The exclusive remedy under this Warranty shall be repair or replacement of the defective component at J. & M. Mfg. Co., Inc's. option. This is the entire agreement between J. & M. Mfg. Co., Inc. and the Owner about warranty and no J. & M. Mfg. Co., Inc. employee or dealer is authorized to make any additional warranty on behalf of J. & M. Mfg. Co., Inc.

The manufacturer reserves the right to make product design and material changes at any time without notice. They shall not incur any obligation or liability to incorporate such changes and improvements in products previously sold to any customer, nor shall they be obligated or liable for the replacement of previously sold products with products or parts incorporating such changes.

SERVICE:

The equipment you have purchased has been carefully manufactured to provide dependable and satisfactory use. Like all mechanical products, it will require cleaning and maintenance. Lubricate the unit as specified. Observe all safety information in this manual and safety signs on the equipment.

For service, your authorized J. & M. dealer has trained mechanics, genuine J. & M. service parts, and the necessary tools and equipment to handle all your needs.

Use only genuine J. & M. service parts. Substitute parts may void warranty and may not meet standards required for safe and satisfactory operation. Record the model number and serial number of your equipment in the spaces provided:

Model No:_____ **Serial No:** _____ **Date of Purchase:** _____

Purchased From: _____

Provide this information to your dealer to obtain correct repair parts.

Table of Contents

4 . . . . . Safety Signs and Decals

5 . . . . . Specifications

6 . . . . . Bolt Torque Chart

7 . . . . . Safety Rules

8 . . . . . Operating Instructions/ Maintenance

9 . . . . . Bleeding Brake Lines

9 . . . . . Adjusting Brake Master Cylinder

10-19. . . . . Repair Parts

Description	Part. No.
Made In USA	JM0019241
For Farm Use Only	JM0018038
www.jm-inc.com	JM0019239
Orange Reflector	JM0009944
Red Reflector	JM0009945
Yellow Reflector	JM0009946
Keep Lug Nuts Tightened	JM0010150
J&M Large	JM0015151
Caution Tighten Lug Nuts Paint	JM0019220
Caution Check Fluid Level	JM0019229
Check Tire Inflation	JM0018041
Check All Wheel Nuts	JM0018043
Danger Flowing Grain Traps	JM0019223
Caution Fasten Box Securely	JM0019228
Gravity Wagon Model Number	JM0019236
J&M Oval Small	JM0010179
Running Gear Model Number	JM0019238

Specifications

Dimensions	
A	457,2 CM
B	238,7 CM
C	304,8 CM
D	223,5 CM
E	341,9 CM
F	254,0 CM
G	629,9 CM
H	38,1 CM

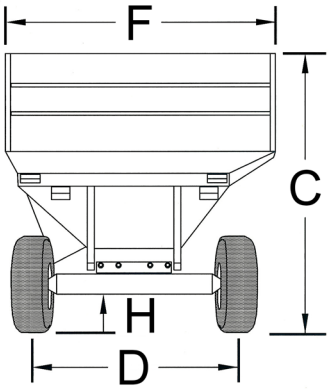

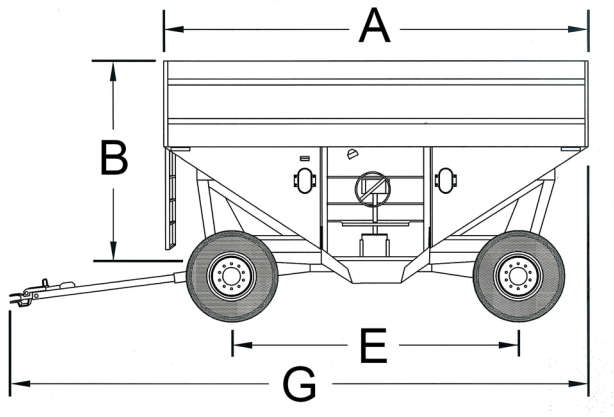

Wagon Specifications	
Capacity - Box	14,7 Ton
Door Width	121,9 cm
Chute Height	35,5 cm to 48,2 cm
Hopper Construction	12 GA Steel
Understructure	7,6 cm x 15,2 cm Tubing
Tail-lights	Standard
Front Ladder	Standard
Center Dump Deflector	Optional
Running Gear	
Spindles	7,6 cm Diameter
Wheels	22.5 x 13.5 - 8 Bolt
Tires	15-22.5 or 16.5-22.5
Hydraulic Brakes	Optional 2-Wheel Drum
Weight (complete unit)	2381 kg

TO THE OWNER:
The purpose of this manual is to assist you in operating and maintaining your running gear in a safe manner. Read it carefully. It furnishes information and instructions that will help you achieve years of dependable performance and help maintain safe operating conditions. If this machine is used by an employee or is loaned or rented, make certain that the operator(s), prior to operating:

1. Is instructed in safe and proper use.
2. Reviews and understands the manual(s) pertaining to this machine.

Throughout this manual, the term IMPORTANT is used to indicate that failure to observe can cause damage to equipment. The terms CAUTION, WARNING and DANGER are used in conjunction with the Safety-Alert Symbol, (a triangle with an exclamation mark), to indicate the degree of hazard for items of personal safety. When you see this symbol, carefully read the message that follows and be alert to the possibility of personal injury or death.

This Safety-Alert symbol indicates a hazard and means
ATTENTION! BECOME ALERT! YOUR SAFETY IS INVOLVED!

Danger Indicates an imminently hazardous situation that, if not avoided, will result in death or serious injury.

Warning Indicates a potentially hazardous situation that, if not avoided, could result in death or serious injury, and includes hazards that are exposed when guards are removed.

Caution Indicates a potentially hazardous situation that, if not avoided, may result in minor or moderate injury.

Important Indicates that failure to observe can cause damage to equipment.

Note Indicates helpful information.

Bolt Torque Chart

Always tighten hardware to these values unless a different torque or tightening procedure is listed for a specific application.

Fasteners must always be replaced with the same grade as specified in the manual parts list.

Always use the proper tool for tightening hardware. SAE for SAE hardware and Metric for metric hardware.

Make sure fastener threads are clean and you start the thread engagement properly. All torque values are given to specification used on hardware defined by SAE J1701 & J1701M (Jul 96).

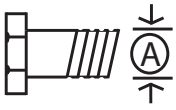

SAE SERIES TORQUE CHART

SAE Grade 2
(No Dashes)

SAE Bolt Head Identification

SAE Grade 5
3 Radial Dashes

SAE Grade 8
6 Radial Dashes

A Diameter (Inches)	Wrench Size	MARKING ON HEAD					
		SAE 2		SAE 5		SAE 8	
		LBS.-FT.	N-m	LBS.-FT.	N-m	LBS.-FT.	N-m
1/4	7/16″	6	8	10	13	14	18
5/16	1/2″	12	17	19	26	27	37
3/8	9/16″	23	31	35	47	49	67
7/16	5/8″	36	48	55	75	78	106
1/2	3/4″	55	75	85	115	120	163
9/16	13/16″	78	106	121	164	171	232
5/8	15/16″	110	149	170	230	240	325
3/4	1-1/8″	192	261	297	403	420	569
7/8	1-5/16″	306	416	474	642	669	907
1	1-1/2″	467	634	722	979	1020	1383

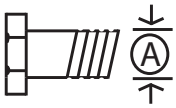

METRIC SERIES TORQUE CHART

Metric
Grade 8.8

Metric Bolt Head Identification

Metric
Grade 10.9

Diameter & (Millimeters) Thread Pitch	Wrench Size	COARSE THREAD				FINE THREAD				Diameter & (Millimeters) Thread Pitch
		MARKING ON THREAD				MARKING ON THREAD				
		Metric 8.8		Metric 10.9		Metric 8.8		Metric 10.9		
6 x 1.0	10 mm	8	6	11	8	8	6	11	8	6 x 1.0
8 x 1.25	13 mm	20	15	27	20	21	16	29	22	8 x 1.0
10 x 1.5	16 mm	39	29	54	40	41	30	57	42	10 x 1.25
12.1.75	18 mm	68	50	94	70	75	55	103	76	12.1.25
14 x 2.0	21 mm	109	80	151	111	118	87	163	120	14 x 1.5
16 x 2.0	24 mm	169	125	234	173	181	133	250	184	16 x 1.5
18 x 2.5	27 mm	234	172	323	239	263	194	363	268	18 x 1.5
20 x 2.5	30 mm	330	244	457	337	367	270	507	374	20 x 1.5
22 x 2.5	34 mm	451	332	623	460	495	365	684	505	22 x 1.5
24 x 3.0	36 mm	571	421	790	583	623	459	861	635	24 x 2.0
30 x 3.0	46 mm	1175	867	1626	1199	1258	928	1740	1283	30 x 2.0

TIGHTENING WHEEL NUTS

Standard 5/8″ wheel studs and nuts should be tightened to torque 220 Ft.-Lbs. During initial operation of the gravity wagon and then checked for proper torque after every 10 hours of use. Failure to do so may damage wheel nut seats. Once seats are damaged, it will become impossible to keep nuts tight.

Safety Rules

ATTENTION! BECOME ALERT! YOUR SAFETY IS INVOLVED!

Safety is a primary concern in the design and manufacture of our products. Unfortunately, our efforts to provide safe equipment can be erased by an operator's single careless act. In addition, hazard control and accident prevention are dependent upon the awareness, concern, judgment, and proper training of personnel involved in the operation, transport, maintenance and storage of equipment.

Make certain that the operator(s), prior to operating is instructed in safe and proper use and reviews and understands the manual(s) pertaining to this machine.

Read this manual before you operate this machine. If you do not understand any part of this manual, or need more information, contact the manufacturer or your authorized dealer.

SAFETY

Understand that your safety and the safety of other persons are measured by how you service, and operate this machine. Know the positions and functions of all controls before you try to operate them. Make sure to check all controls in a safe area before starting your work.

The safety information given in this manual does not replace safety codes, federal, state or local laws. Make certain your machine has the proper equipment as designated by local laws and regulations.

A frequent cause of personal injury or death is from persons falling off equipment and being run over. Do not permit persons to ride on this machine.

Travel speeds should be such that complete control and machine stability is maintained at all times. Where possible, avoid operating near ditches, embankments and holes. Reduce speed when turning, crossing slopes and rough, slick or muddy surfaces.

Collision of high speed road traffic and slow moving machines can cause personal injury or death. On roads, use flasher lights according to local laws. Keep slow-moving-vehicle emblem visible. Pull over to let faster traffic pass.

Never adjust, service, clean, or lubricate gravity box until all power is shut off.

Keep all safety shields in place. Keep hands, feet, hair and clothing away from moving parts while unit is in operation.

The service ladder is for service work only. If you must climb into the grain tank, be certain that all power is shut off and then use extreme caution when climbing into the grain tank. Never allow anyone in, near or on the gravity box during transporting or unloading grain. Moving grain is dangerous and can cause entrapment, resulting in severe injury or death by suffocation.

Make sure that everyone is clear of equipment before applying power or moving the machine.

Make sure that the implement is fastened securely to the tractor by using the proper hitch pin, clip and safety chains. Make sure the gravity wagon is properly fastened to the running gear.

Never overload the wagon. Overloading the wagon is dangerous and can cause extensive damage. Never add more sideboards to the gravity box than what is recommended, as the box is not designed to carry the additional weight. Do NOT exceed speeds in excess of 20 MPH. Rim, hubs and bearings are designed for heavy loads at slow speeds. Also be sure slow moving vehicle emblem is attached to rear of wagon.

Before unhooking the implement from the towing unit, be sure to properly block the wheels to prevent the implement from moving.

Operating Instructions / Maintenance

Warning **BE CERTAIN THAT ALL POWER IS SHUTOFF BEFORE SERVICING EQUIPMENT.**

Lubricate the track assembly for less wear on the sprocket and track for easier door operations.

Ensure that all braces, bolts, nuts and lug bolts are properly fastened.

Check to see that all lights are working properly.

Make sure all decals are clean and visible.

Read and understand all safety instructions for this machine.

The SMV sign needs to be placed with a point of the triangle upward and as near to the rear and centered or as near to the left of center of the unit as practicable.

Operations - Braking System Requirements

Braking System Requirements

Warning Tow Loads Safety

Stopping distance increases with speed and weight of towed loads, and on slopes. Towed loads with or without brakes that are too heavy for the tractor or are too fast can cause loss of control. Consider the total weight of the equipment and its load.

For towed equipment WITHOUT brakes, the following is recommended:
Do NOT tow equipment that does not have brakes at speeds over 32 km/h (20 mph); or that, when fully loaded, has a mass (weight) over 1.5t (3300 lb) and more than 1.5 times the mass (weight) of the towing unit.

For towed equipment WITH brakes, the following is recommended:
Do NOT tow equipment that has brakes at speeds over 40 km/h (25 mph); or that, when fully loaded, has a mass (weight) more than 4.5 times the mass (weight) of the towing unit.

Ensure the load does not exceed the recommended weight ratio. Use additional caution when towing loads under adverse conditions, when turning and on inclines.

Warning
Before filling the gravity box, make certain that no one is inside the grain tank. Never allow children or anyone in, near or on the gravity box during transport or during loading or unloading of grain. Be aware that moving grain is dangerous and can cause entrapment, resulting in severe injury or death by suffocation.

After hauling corrosive material such as fertilizers, be sure to wash out the grain tank to prevent premature rusting. Bare spots on metal should be primer coated before applying the outer surface paint. Check the box periodically for cracks in welds and for other structural damage. Have cracked welds fixed immediately. Failure to do so could result in extensive damage and greatly reduce the life of the gravity box

Bleeding The Brake Lines

METHOD ONE (requires two people)
Close all bleed screws.

Start with the wheel furthest from the master cylinder. Slip a transparent bleed hose on the bleeder stem and place the other end of the hose in a clean container which is partially filled with fluid at all times.

The first person depresses the brake plunger SLOWLY (take 3-5 seconds). THEN the second person opens the bleed screw. He then closes the bleed screw BEFORE the first person SLOWLY releases the plunger (3-5 seconds). Continue until there is no evidence of air in the bleed hose. Continue with remaining wheels working from the longest to the shortest distance from the master cylinder. Top off master cylinder as needed to prevent reintroducing air into the lines.

IMPORTANT:
1) Depress plunger slowly
2) Open bleed screw
3) Close bleed screw
4) Release plunger slowly

METHOD TWO (one person)
Attach bleed hose to rear wheel as in method one. Open bleed screw. SLOWLY depress plunger (3-5 seconds). Repeat until line is air free. Close bleed screw. Top off master cylinder as needed to prevent reintroducing air into the lines.

Repeat with remaining wheel.

Contamination with dirt, water, petroleum products or other materials may result in brake failure or costly repairs.

Adjusting the Brake Master Cylinder

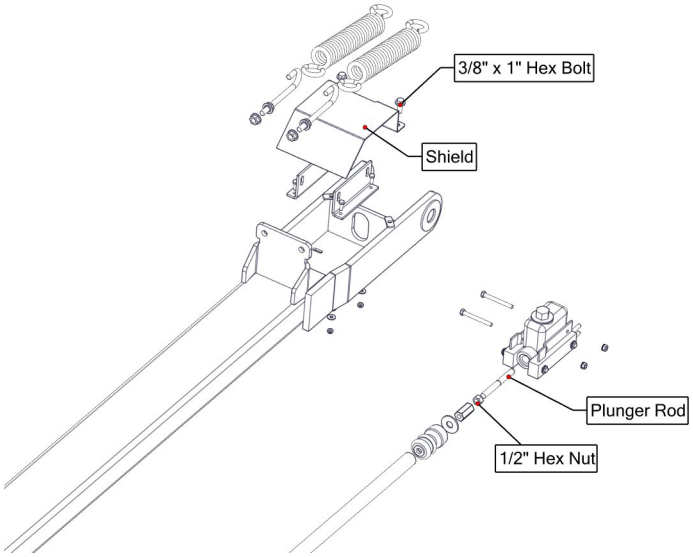

1) Remove the shield. Use a 9/16" wrench to remove the (2) 3/8" x 1" serrated hex head bolts from shield.
2) Loosen the 1/2" nut on the plunger pin. Use a 3/4" wrench to loosen the 1/2" hex nut.
3) Turn the plunger rod to adjust.
   - For more aggressive braking action turn the plunger rod counterclockwise. (this will lengthen the assembly.
   - For less aggressive braking action turn the plunger rod clockwise. (this will shorten the assembly)

Do not adjust all the "Play" out of the plunger system. This will cause the brakes to be activated at all times and over heat the drums causing failure.
(This braking system is to assist the pull vehicle in the braking mode, not to take the place of it.)
The braking plunger system should have approximately a 1/4" of "play" when adjusted for level road travel.
4) Tighten the 1/2" hex nut to keep plunger rod in place.
5) Put the shield back on and tighten both 3/8" x 1" serrated hex head bolts.

Sideboards

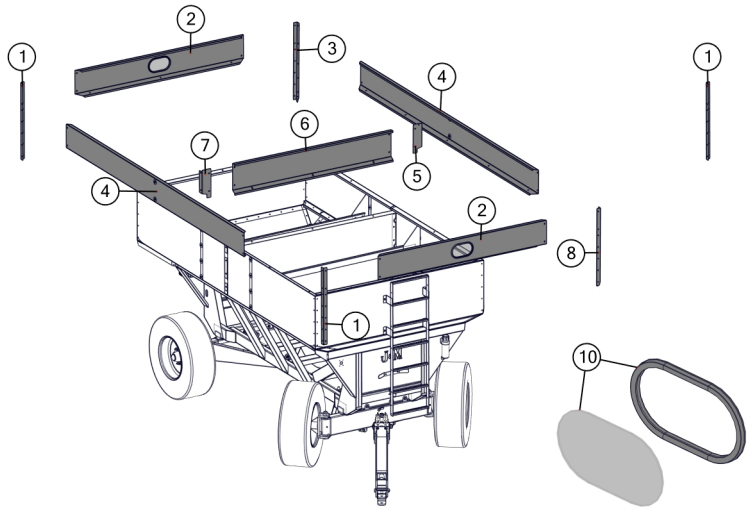

With Divider Option

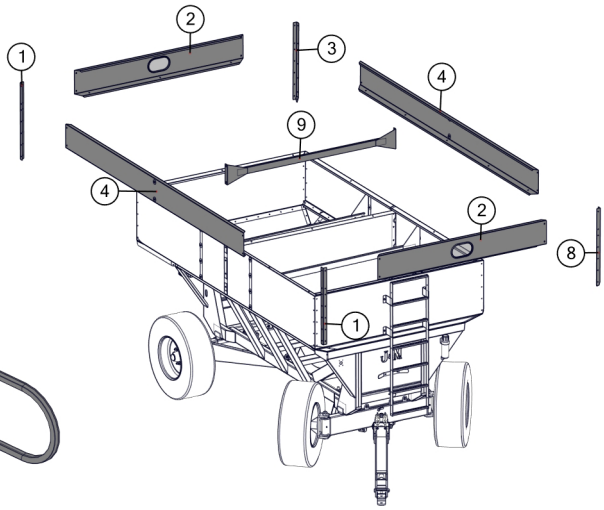

Without Divider Option

#		Description	Part. No.
1		Opposite Dumpside Corner	JM0019474
2		Endboard	JM0010588
3		Dumpside Rear Corner	JM0019477
4		Sideboard	JM0010587
5		Divider Top Panel Front Bracket	JM0014202
6		Divider Top Board	JM0014205
7		Divider Top Panel Rear Bracket	JM0014204
8		Dumpside Front Corner	JM0019484
9		Cross Center Brace (without divider)	JM0019093
10		Oval Window and Grommet	JM0025752
	A	Oval Window Grommet	JM0002454
	B	Oval Window	JM0002455

NOTE: #5, #6, and #7 are for divider option only.

Mid-Level Panels

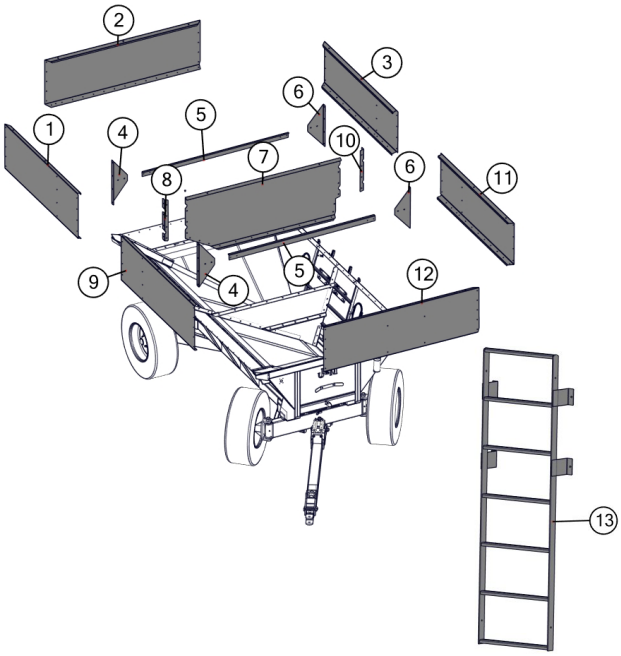

#	Description	Part. No.
1	Opposite Dumpside Rear Upper Panel	JM0019456
2	Rear Top Panel	JM0019461
3	Dumpside Rear Upper Panel	JM0019465
4	Opposite Dumpside Brace Mount	JM0021871
5	Side to Side Brace	JM0021872
6	Dumpside Brace Mount	JM0021869
7	Divider Mid Panel	JM0014108
8	Opposite Dumpside Divider Panel Mount	JM0014158
9	Opposite Dumpside Front Upper Panel	JM0019449
10	Dumpside Divider Panel Mount	JM0014156
11	Dumpside Front Upper Panel	JM0019463
12	Front Top Panel	JM0019425
13	Ladder	JM0019104

NOTE: #7, #8, and #10 are for divider option only.

Lower Panels

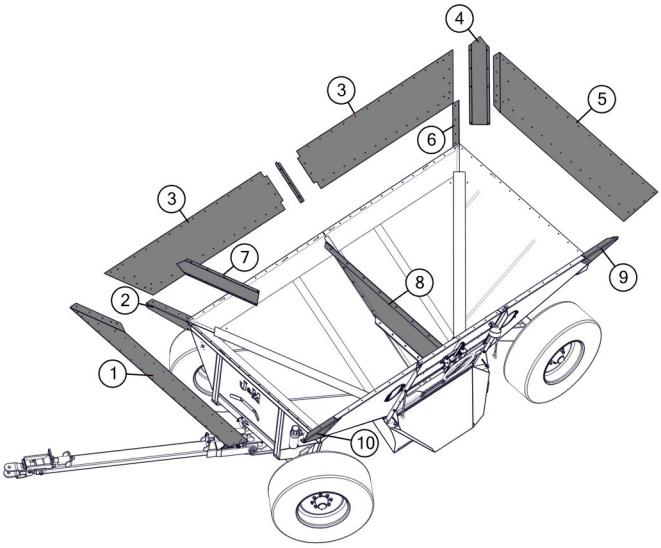

#	Description	Part. No.
1	Front Middle Panel	JM0019431
2	Front Outside Corner	JM0008575
3	Opposite Dumpside Lower Panel	JM0019452
4	Rear Valley	JM0008549
5	Rear Middle Panel	JM0019462
6	Rear Outside Corner	JM0008571
7	Front Valley	JM0015454
8	Lower Divider Panel	JM0014056
9	Rear Triangle Corner	JM0009816
10	Front Triangle Corner	JM0015483

NOTE: #8 is for divider option only.

Lights and SMV

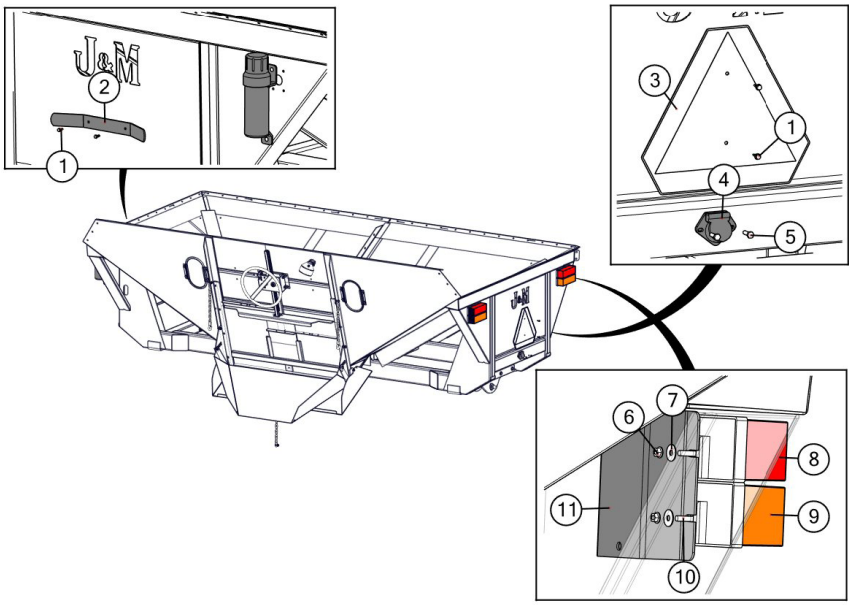

#	Description	Part. No.
1	1/4” x 3/4” Self Tapping Screw	JM0001570
2	Light Chord Holder	JM0001438
3	Manual Canister	JM0010115
4	7-Wire Connector End	JM0019416
5	5/16-18 X 1” Gr5 Z Hex Bolt	JM0001743
5	5/16-18 Gr5 Z SF Hex Nut	JM0014049
6	M6-1 Gr8.8 Z SF Hex Nut	JM0002156
7	M6 Flat Washer	JM0019447
8	Rear Red Brake Light & Turn Signal (Roadside-Left)	JM0018837
8	Rear Red Brake Light & Turn Signal (Right)	JM0018838
9	Rear Orange Brake Light & Turn Signal (Roadside-Left)	JM0019417
9	Rear Orange Brake Light & Turn Signal (Right)	JM0019419
10	Light Wire Cover	JM0013938

Gear Reduction Wheel Assembly & Doors

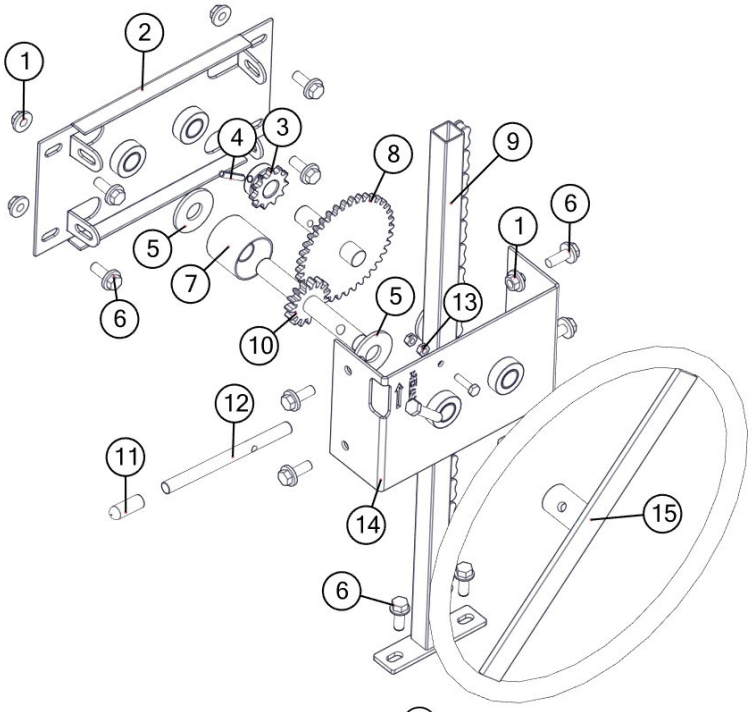

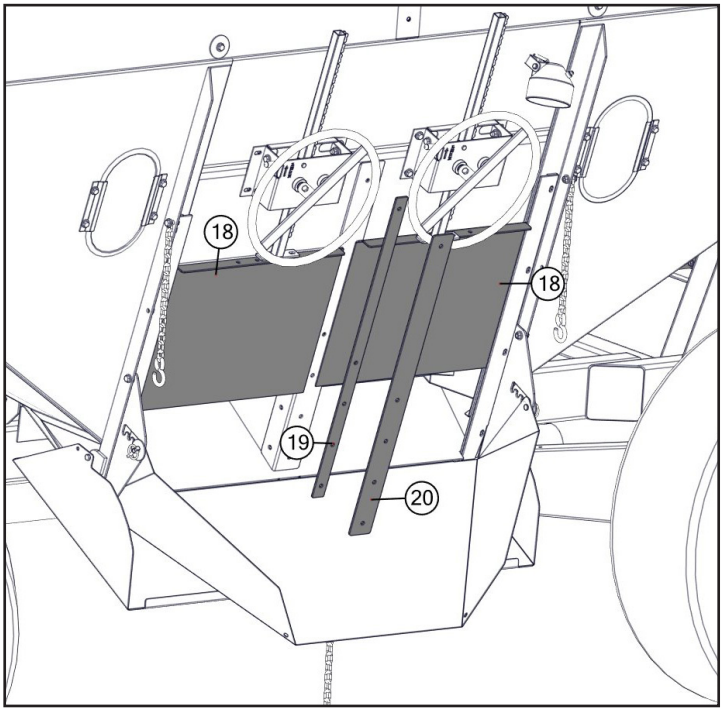

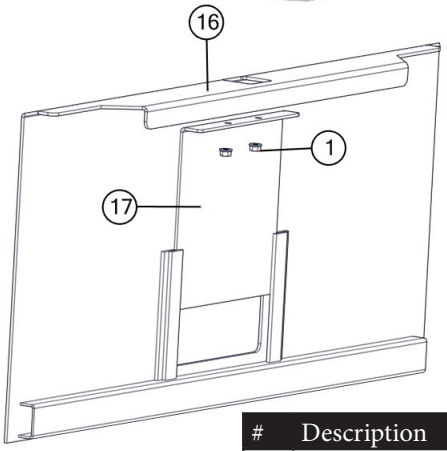

#	Description	Part. No.
1	3/8”-16 Gr5 Z SF Hex Nut	JM0002152
2	Rear Mounting Plate	JM0028412
3	11 Tooth Sprocket	JM0018872
4	1/4” x 1-3/8” Roll Pin	JM0009896
5	3/4” USS Flat Washer	JM0010006
6	3/8”-16 x 1” Gr5 Z SF Hex Bolt	JM0002092
7	Roller w/ Bronze Bushing	JM0019065
8	38 Tooth Sprocket w/ Shaft	JM0028410
9	Track and Chain Assembly	JM0028403
10	15 Tooth Sprocket w/ Shaft	JM0028411
11	Rubber End Cap	JM0016842
12	Locking Bar	JM0019097
13	1/4”-20 Gr5 Z Centerlock Hex Nut	JM0001505
14	Door Housing Cover	JM0028409
15	Wheel, Pin, and Strap Assembly	JM0028404
16	Gate	JM0015436
17	Metering Door	JM0017441
18	Divider Gate	JM0018414
19	Divider Slat Spacer	JM0014159
20	Divider Slat Spacer	JM0014160

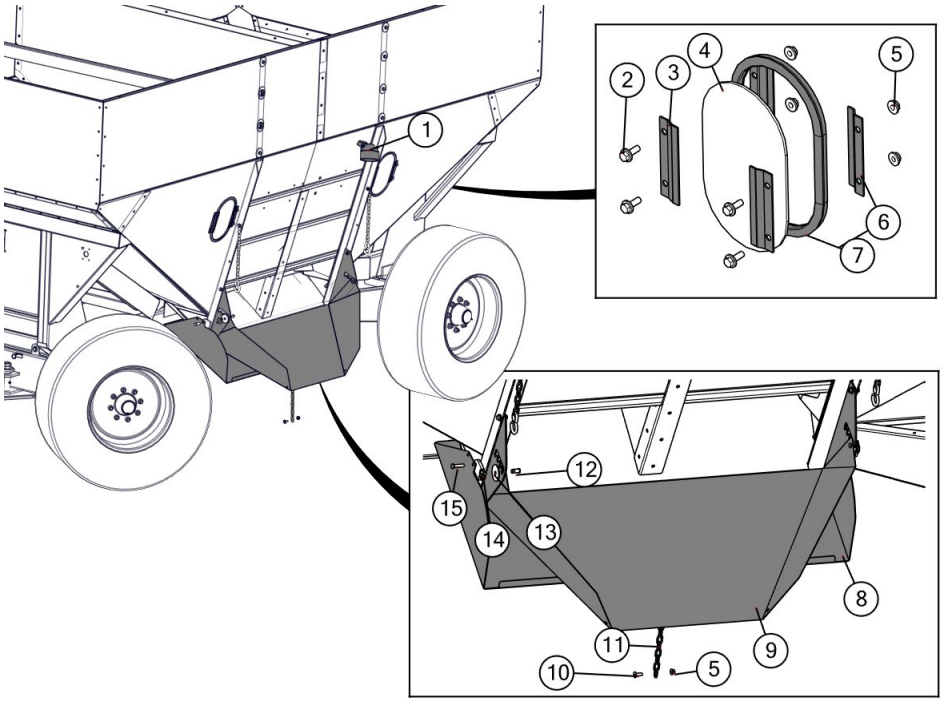

#	Description	Part. No.
1	Flood Light	JM0019410
2	3/8”-16 X 1” Gr5 Z SF Hex Bolt	JM0002092
3	Outside Window Clip	JM0017241
4	Oval Window	JM0002455
5	3/8-16 Gr5 Z SF Hex Nut	JM0002152
6	Oval Window Grommet	JM0002454
7	Inside Window Clip	JM0019084
8	Center Dump Chute	JM0017394
9	Adjustable Grain Chute	JM0017390
10	3/8”-16 X 1” Gr5 Z Screwdriver Head Bolt	JM0002892
11	7/8” x 17” Chain	JM0019578
12	Pin	JM0019110
13	1/2” Washer	JM0019081
14	1/4” Snap Ring	JM0001870
15	3/8”-16 X 1-1/2” Gr5 Z Hex Bolt	JM0001659
15	3/8”-16 Gr5 Z Hex Nut (Not Shown)	JM0001707

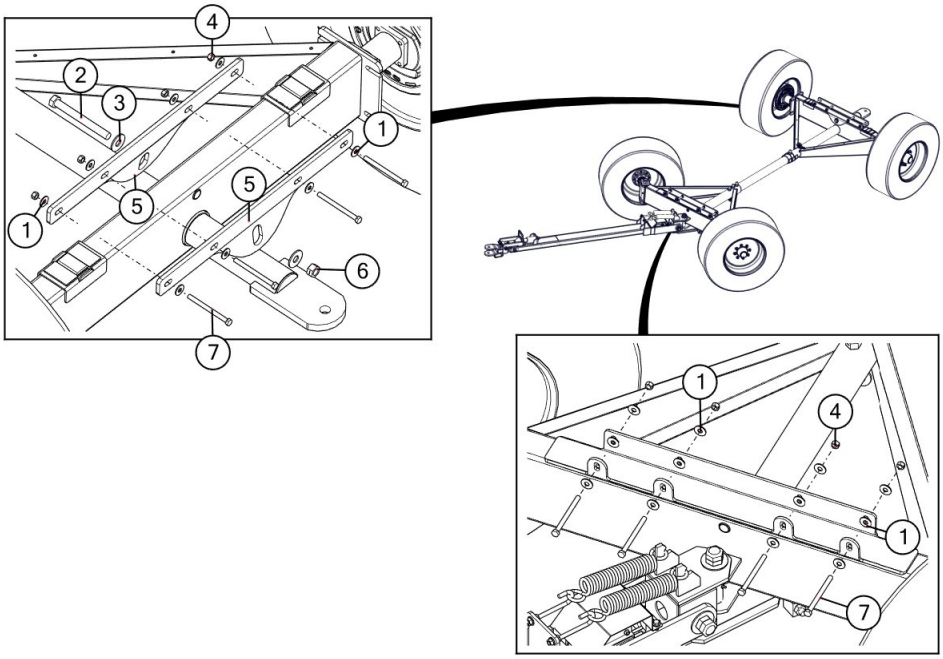

#	Description	Part. No.
1	1/2” USS Flat Washer	JM0003082
2	7/8”-9 x 8” Gr8 Z Hex Bolt	JM0019392
3	7/8” USS Flat Washer	JM0014395
4	1/2”-13 Gr5 Z Centerlock Hex Nut	JM0001511
5	Rocking Bolster Plate	JM0017504
6	7/8”-9 Gr5 Z Centerlock Hex Nut	JM0002148
7	1/2”-13 x 6” Gr5 Z Hex Bolt	JM0016679

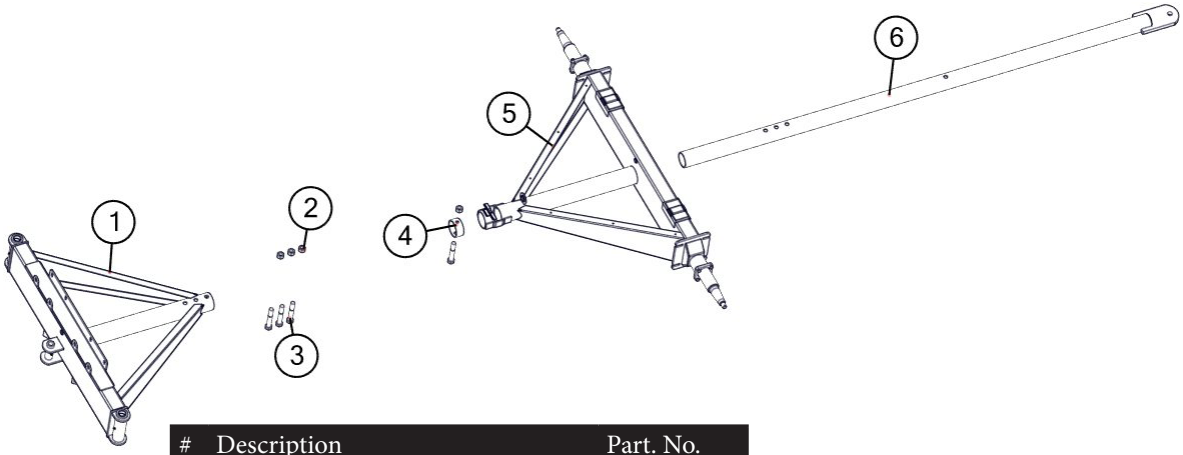

#	Description	Part. No.
1	Front A-Frame Weldment	JM0015493
2	1"-8 Gr5 Z Centerlock Hex Nut	JM0002149
3	1"-8 X 6-1/2" Gr5 Z Hex Bolt	JM0014192
4	Retaining Ring	JM0015724
5	Rear A-Frame Weldment	JM0015495
6	Coupling Pole	JM0015715

Front A-Frame Weldment

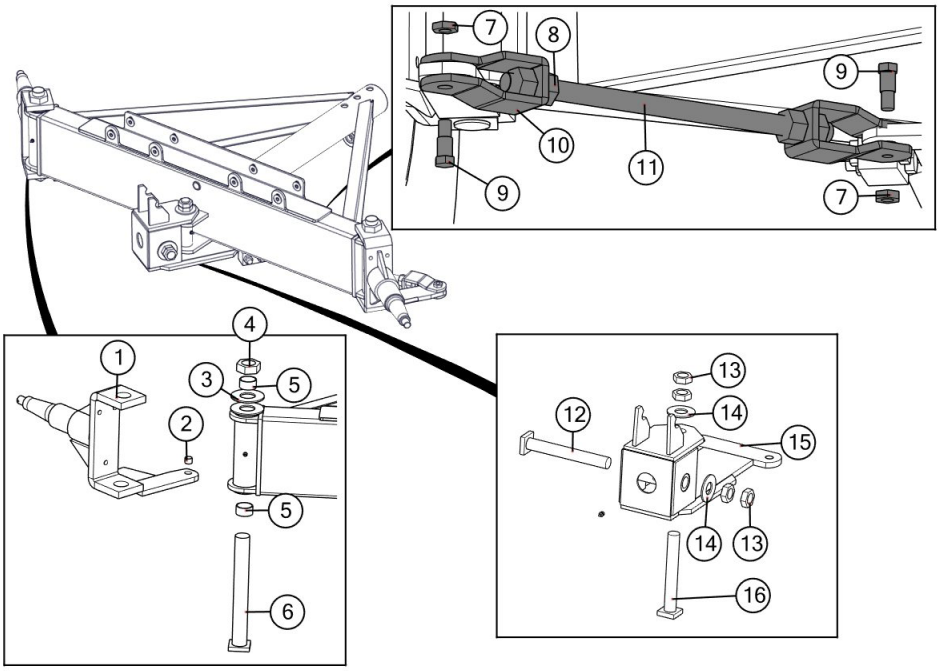

#	Description	Part. No.
1	Front Right A-Frame Arm	JM0016039
1	Front Left A-Frame Arm	JM0019183
2	3/4” Bronze Bushing	JM0009455
3	1-3/4” USS Flat Washer	JM0029723
4	1-3/4”-5 Gr5 Hex Nut	JM0019334
5	1-3/4” Bronze Bushing	JM0002244
6	A-Frame Kingpin	JM0019321
7	3/4” Shoulder Bolt Nut	JM0003184
8	1”-14 GR5 Right Hand Hex Nut	JM0014282
9	3/4” x 2-1/2” Shoulder Bolt	JM0003181
10	Clevis Weldment (Right)	JM0001822
10	Clevis Weldment (Left)	JM0019189
11	Running Gear Tie Rod	JM0019190
12	1-1/4” Kingpin Horizontal	JM0019324
13	1-1/4”-7 Gr5 Z Centerlock Hex Nut	JM0002150
14	1-1/4” USS Flat Washer	JM0010112
15	Tongue Yolk Weldment	JM0015746
16	1-1/4” Kingpin Vertical	JM0019332

Tongue Assembly

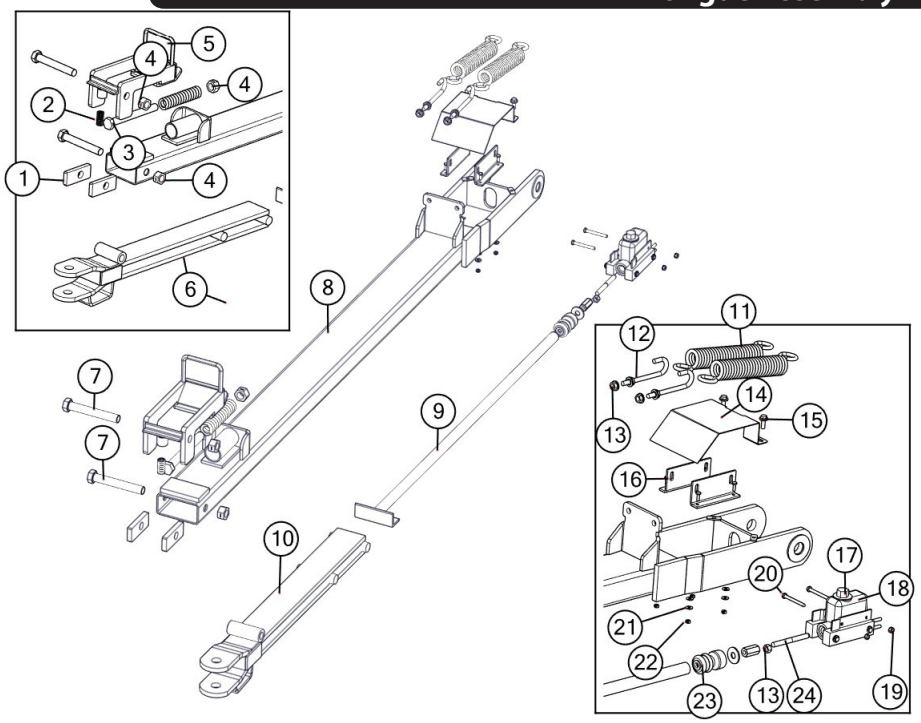

#	Description	Part. No.
1	Tongue Side Slide Guide	JM0019306
2	Small Compression Spring	JM0001688
3	1"-8 x 9" Gr8 Z Hex Bolt	JM0001708
4	1"-8 Gr5 Z Centerlock Hex Nut	JM0002149
5	Tongue Latch Weldment	JM0019289
6	Hitch Insert Weldment	JM0019304
7	1"-8 X 7" Gr5 Z Hex Bolt	JM0016689
8	Hitch Tongue Weldment	JM0019261
9	Brake Plunger	JM0019344
10	Hitch Insert Weldment	JM0019304
11	Tongue Spring	JM0014200
12	1/2"-13 Gr5 Z J-Bolt	JM0002168
13	1/2"-13 Gr5 Z SF Hex Nut	JM0002153
14	Plunger Cover	JM0019273
15	3/8"-16 x 1" Gr5 Z SF Hex Bolt	JM0002092
16	Master Cylinder Mounting Bracket	JM0019340
17	Master Cylinder Cap	JM0019357
18	Master Cylinder Spring Bracket	JM0019356
19	5/16"-18 Gr5 Z Star Washer Hex Nut	JM0019361
20	5/16-18 X 3" Gr5 Z Hex Bolt	JM0019359
21	1/4" USS Flat Washer	JM0003090
22	1/4"-20 Gr5 Z Centerlock Hex Nut	JM0001505
23	Master Cylinder Rubber Boot	JM0019358
24	Master Cylinder Push Pin	JM0019341

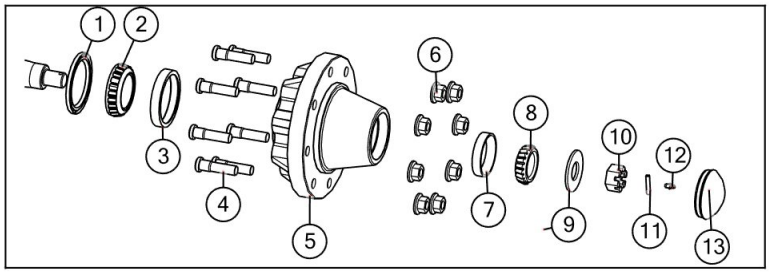

#	Description	Part. No.
1	Grease Seal	JM0019232
2	Inner Cone	JM0018101
3	Inner Cup	JM0018100
4	5/8"-18 x 1-11/16" Stud	JM0019235
5	G75-8 Hub Non-Brake (Front)	JM0019207
5	G75-8 Brake Hub (Rear)	JM0019250
6	5/8"-18 Flange Lugnut	JM0019246
7	Outer Cup	JM0019227
8	Outer Cone	JM0019224
9	1-1/4" USS Flat Washer	JM0014353
10	1"-14 Gr5 Z Castle Hex Nut	JM0019237
11	Cotter Pin	JM0009896
12	Grease Fitting	JM0019243
13	Dust Cap	JM0019242

13” Drum Brake Assembly

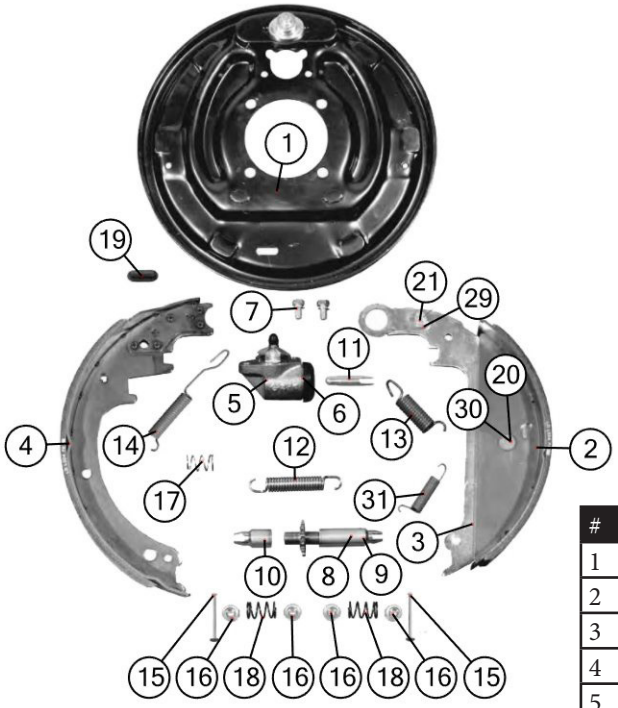

#	Description	Part. No.
1	Backplate Assembly	JM0027934
2	Front Brake Shoe	JM0027935
3	Front Shoe Lever	JM0027936
4	Rear Shoe Lever	JM0027937
5	Wheel Cylinder Assembly (Right)	JM0027938
6	Wheel Cylinder Assembly (Left)	JM0027939
7	Screw and Lockwasher	JM0027940
8	Adjusting Screw	JM0027941
9	Pivot Nut	JM0027942
10	Socket (Adjusting Screw)	JM0027943
11	Push Rod - Wheel Cylinder	JM0029744
12	Spring Adjusting Screw (Yellow)	JM0027944
13	Front Shoe Spring (Red)	JM0027957
14	Orange Spring	JM0027946
15	Shoe Hold Down Pin	JM0027947
16	Shoe Hold Down Cup	JM0027948
17	Yellow Spring (Front Hold Down)	JM0027949
18	Black Spring	JM0027950
19	Cover Plate for Adjusting Hole	JM0027951
20	Retaining Ring	JM0027952
21	Hex Locknut 5/16in NC	JM0027953
28	Travel Link	JM0027954
29	Hex Cap Screw	JM0027955
30	Front Shoe Pin	JM0027956
31	Free Backing Spring	JM0027957
32	Plastic Plug	JM0027958
33	Hex Nut 1/2in NF (not shown)	JM0027959
34	Lockwasher 1/2in (not shown)	JM0027961
35	Wheel Cylinder Repair Kit 1-1/8”	JM0027963
36	Drum Brake Cluster Assy (Left)	JM0027922
37	Drum Brake Cluster Assy (Right)	JM0027931
38	13” Brake Drum - G819 Hub (5-3/4” Pilot)	JM0027928

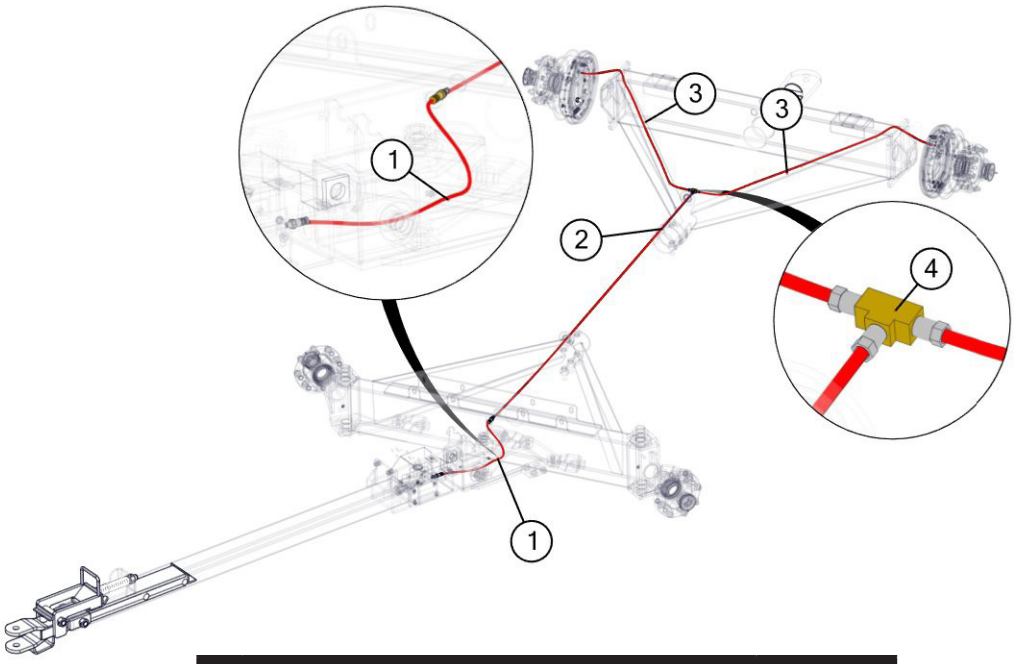

#	Description	Part. No.
1	1/4" x 24" Hydraulic Hose	JM0029557
2	96 x 3/16 Tube w/Nut Both Ends (Brake Line)	JM0027969
3	53 x 3/16 Tube w/Nut Both Ends (Brake Line)	JM0027970
4	Brake Line Tee	JM0027967

Wiring Harness

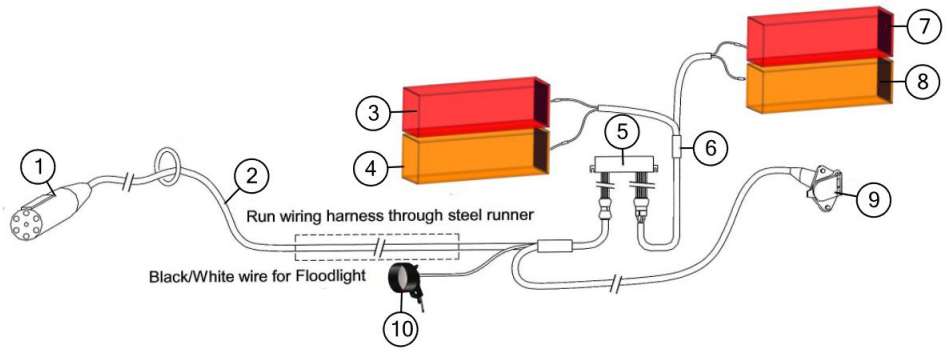

#	Description	Part. No.
1	7-Wire Connector End	JM0010528
2	Main Wiring Harness	JM0027774
3	Rear Red Brake Light & Turn Signal (Roadside-Left)	JM0018837
4	Rear Orange Brake Light & Turn Signal (Roadside-Left)	JM0019417
5	Light Enhancer	JM0010566
6	Light Harness	JM0027773
7	Rear Red Brake Light & Turn Signal (Right)	JM0018838
8	Rear Orange Brake Light & Turn Signal (Right)	JM0019419
9	7-Wire Nose Box	JM0027775
10	Flood Light	JM0019410