OPERATORS MANUAL

5010
5016

NITRO-GRO
PRECISION APPLICATOR

Rev. 2.6. 2020

J. & M. Mfg. Co., Inc.
284 Railroad Street - P.O. Box 547
Fort Recovery, OH 45846
Ph: (419) 375-2376 Fax: (419) 375-2708
www.jm-inc.com

Table of Contents

4-5 ..... To the Dealer

6 ..... General Information

7 ..... Bolt Torque Chart

8 ..... Specifications

9 ..... Safety Rules

10-14 ..... Components

15 ..... Pre-Operation Checklist

16-20 ..... Initial Operation

18 ..... Wheel Spacing

19-20 ..... Quick Start

21 ..... Break in Period

22 ..... Trouble Shooting

23 ..... Service/Maintenance

23 ..... Storage

24-25 ..... Safety Signs

26-41 ..... Repair Parts

42-43 ..... Liquid Control Systems

44-47 ..... Fertilizer Hose Routing

48-49 ..... Hydraulics Schematic

50-61 ..... Injector/Orifice Charts

To The Dealer

Read manual instructions and safety rules. Make sure all items on the Dealer's Pre-Delivery and Delivery Check Lists are completed before releasing equipment to the owner.
The dealer must complete the Warranty Registration found on the Dealer Portal website located at dealer.jm-inc.com and return it to J. & M. Mfg. Co., Inc. at the address indicated on the form. Warranty claims will be denied if the Warranty Registration has not been submitted.

EXPRESS WARRANTY:

J. & M. Mfg. Co. Inc. warrants against defects in construction or materials for a period of ONE year. We reserve the right to inspect and decide whether material or construction was faulty or whether abuse or accident voids our guarantee.

Warranty service must be performed by a dealer or service center authorized by J. & M. Mfg. Co., Inc. to sell and/or service the type of product involved, which will use only new or remanufactured parts or components furnished by J. & M. Mfg. Co., Inc. Warranty service will be performed without charge to the purchaser for parts or labor based on the Warranty Labor Times schedule. Under no circumstance will allowable labor times extend beyond the maximum hours indicated in the Warranty Labor Times schedule for each warranty procedure. The purchaser will be responsible, however, for any service call and/or transportation of the product to and from the dealer or service center's place of business, for any premium charged for overtime labor requested by the purchaser, and for any service and/or maintenance not directly related to any defect covered under the warranty. Costs associated with equipment rental, product down time, or product disposal are not warrantable and will not be accepted under any circumstance.

Each warranty term begins on the date of product delivery to the purchaser. Under no circumstance will warranty be approved unless (i) the product warranty registration card has been properly completed and submitted to the equipment manufacturer, and (ii) a warranty authorization number has been issued by the equipment manufacturer. This Warranty is effective only if the warranty registration card is returned within 30 days of purchase.

This warranty does not cover a component which fails, malfunctions or is damaged as a result of (i) improper modification or repair, (ii) accident, abuse or improper use, (iii) improper or insufficient maintenance, or (iv) normal wear or tear. This warranty does not cover products that are previously owned and extends solely to the original purchaser of the product. Should the original purchaser sell or otherwise transfer this product to a third party, this implied, with respect to tires or other parts or accessories not manufactured by J. & M. Mfg. Co., Inc. Warranties for these items, if any, are provided separately by their respective manufacturers.

THIS WARRANTY IS EXPRESSLY IN LIEU OF ALL OTHER WARRANTIES OR CONDITIONS, EXPRESS, IMPLIED OR STATUTORY, INCLUDING ANY IMPLIED WARRANTY OF MERCHANTABILITY OR FITNESS FOR PARTICULAR PURPOSE.

In no event shall J. & M. Mfg. Co., Inc. be liable for special, direct, incidental or consequential damages of any kind. The exclusive remedy under this Warranty shall be repair or replacement of the defective component at J. & M. Mfg. Co., Inc's. option. This is the entire agreement between J. & M. Mfg. Co., Inc. and the Owner about warranty and no J. & M. Mfg. Co., Inc. employee or dealer is authorized to make any additional warranty on behalf of J. & M. Mfg. Co., Inc.

The manufacturer reserves the right to make product design and material changes at any time without notice. They shall not incur any obligation or liability to incorporate such changes and improvements in products previously sold to any customer, nor shall they be obligated or liable for the replacement of previously sold products with products or parts incorporating such changes.

SERVICE:

The equipment you have purchased has been carefully manufactured to provide dependable and satisfactory use. Like all mechanical products, it will require cleaning and maintenance. Lubricate the unit as specified. Observe all safety information in this manual and safety signs on the equipment.

For service, your authorized J. & M. dealer has trained mechanics, genuine J. & M. service parts, and the necessary tools and equipment to handle all your needs.

Use only genuine J. & M. service parts. Substitute parts may void warranty and may not meet standards required for safety and satisfactory operation. Record the model number and serial number of your equipment in the spaces provided:

Model No: 5010-5016 NitroGro Applicator **Serial No:** _____ **Date of Purchase:** _____

Purchased From: _____

Provide this information to your dealer to obtain correct repair parts.

Serial Number

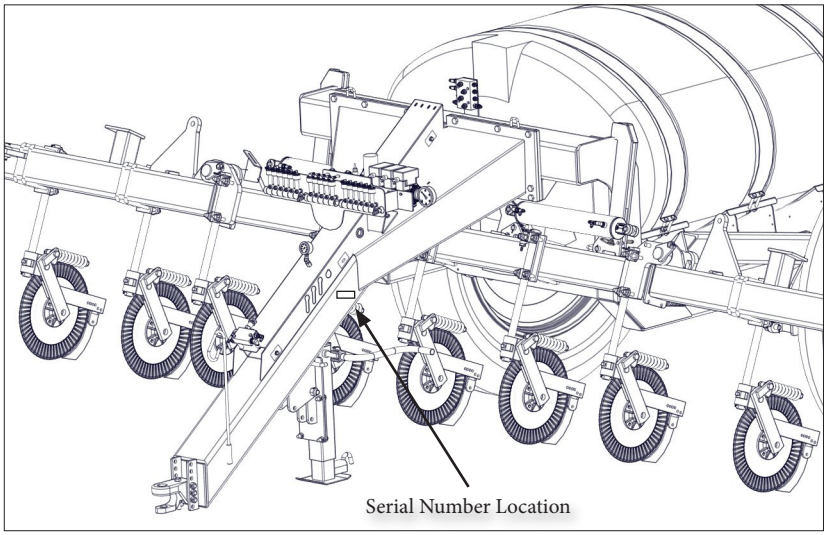

Serial Number_____
Model Number_____

Standard practice when ordering parts or obtaining information from your dealer requires the serial number and model number. Have numbers available before making contact.

Dealer Set-Up

- Adjust wheels to desired width.
- Move light brackets so that the amber light sticks out past the wheels.
- Slide coulters down and reattach hoses
- Run water into the tank, turn pump on and check for leaks
- See set-up instructions in the ACE Pump Manual
- Turn on 3-section valves and check for flow to each row
- Inspect the unit for loose nuts, bolts, etc.
- Check all bearings and grease fittings for proper lubrication.
- Make sure that working parts move freely and function as intended.
- Check the hydraulic cylinders, hydraulic hoses, fertilizer fittings, and seals for leaks.
  ⚠ **WARNING - Use cardboard or wood to check for leaks.**
- Make sure that the lug nuts are tightened and all tires are inflated properly.
- Check that all of the safety decals, reflective decals, and the slow moving vehicle sign are properly located.
- Make sure that all the lights function properly.
- Examine paint for defects and scratches.

General Information

TO THE OWNER:

The purpose of this manual is to assist you in operating and maintaining your nitrogen applicator in a safe manner. Read it carefully. It furnishes information and instructions that will help you achieve years of dependable performance and help maintain safe operating conditions. If this machine is used by an employee or is loaned or rented, make certain that the operator(s), prior to operating:

1. Is instructed in safe and proper use.
2. Reviews and understands the manual(s) pertaining to this machine.

Throughout this manual, the term IMPORTANT is used to indicate that failure to observe can cause damage to equipment. The terms CAUTION, WARNING and DANGER are used in conjunction with the Safety-Alert Symbol (a triangle with an exclamation mark) to indicate the degree of hazard for items of personal safety. When you see this symbol, carefully read the message that follows and be alert to the possibility of personal injury or death.

⚠ This Safety-Alert symbol indicates a hazard and means ATTENTION! BECOME ALERT! YOUR SAFETY IS INVOLVED!

⚠ DANGER Indicates an imminently hazardous situation that, if not avoided, will result in death or serious injury.

⚠ WARNING Indicates a potentially hazardous situation that, if not avoided, will result in death or serious injury, and includes hazards that are exposed when guards are removed.

⚠ CAUTION Indicates a potentially hazardous situation that, if not avoided, may result in minor or moderate injury.

IMPORTANT Indicates that failure to observe can cause damage to equipment.

NOTE Indicates helpful information.

Note: The right and the left hand sides of the implement are determined by facing the same direction that the applicator will travel when moving forward.

Bolt Torque Chart

Always tighten hardware to these values unless a different torque or tightening procedure is listed for specific application. Fasteners must always be replaced with the same grade as specified in the manual parts list. Always use the proper tool for tightening hardware. Make sure fastener threads are clean and you start thread engagement properly. **Use these values when tightening all bolts and nuts with the exception of wheel nuts.**

SAE Fasteners

Coarse Thread Series				
	Grade 5		Grade 8	
Diameter and Pitch (Inches)	*Dry*	*Oiled*	*Dry*	*Oiled*
1/4″-20	8 ft-lbs	6 ft-lbs	12 ft-lbs	9 ft-lbs
5/16″-18	17	13	25	18
3/8″-16	31	23	44	33
7/16″-14	49	37	70	52
1/2″-13	75	57	106	80
9/16″-12	109	82	154	115
5/8″-11	150	113	212	159
3/4″-10	267	200	376	282
7/8″-9	429	322	606	455
1″-8	644	483	909	681
Fine Thread Series				
Diameter and Pitch (Inches)	*Dry*	*Oiled*	*Dry*	*Oiled*
1/4″-28	10 ft-lbs	7 ft-lbs	14 ft-lbs	10 ft-lbs
5/16″-24	19	15	27	20
3/8″-24	35	26	49	37
7/16″-20	55	41	78	58
1/2″-20	85	64	120	90
9/16″-18	121	91	171	128
5/8″-18	170	127	240	180
3/4″-16	297	223	420	315
7/8″-14	474	355	669	502

Stud and Wheel Nut Torque Specifications

Always tighten hardware to these values unless a different torque or tightening procedure is listed for specific application. Fasteners must always be replaced with the same grade as specified in the manual parts list. Always use the proper tool for tightening hardware. Make sure fastener threads are clean and you start thread engagement properly. **Use these values when tightening all studs and wheel nuts.**

Stud	Tightening Torque
1/2″-20	120 ft-lbs
9/16″-18	170 ft-lbs
5/8″-18	300 ft-lbs
3/4″-16	400 ft-lbs
20mm	475 ft-lbs
22mm	640 ft-lbs

TIGHTENING WHEEL NUTS: During initial operation of the NitroGro applicator, **tighten standard 3/4" wheel studs and nuts to torque 400 ft-lbs and tighten 1/2"-20 gauge wheel studs and nuts to torque 80 ft-lbs**. Check for proper torque after every 10 hours of use. Failure to do so may damage wheel nut seats. Once seats are damaged, it will become impossible to keep nuts tight.

SPECIFICATIONS 5000 Series Applicators		
Tank Size	1,000 Gallon	1,600 Gallon
Base Width	30′-0″	40′-0″
Ground Clearance	34″	34″
Row Spacing*	20″, 30″	20″, 30″
Number of Coulters	11, 13, 15, 17, 23, 25	11, 13, 15, 17, 23, 25
Coulter Style	Grove Engineered Products (GEP)	Grove Engineered Products (GEP)
Fertilizer Delivery	Knife or Injection	Knife or Injection
Wing Flex	Standard 8° Flex Up - 6° Flex Down Can be operated rigidly	Standard 8° Flex Up - 6° Flex Down Can be operated rigidly
Wing Kick	Standard	Standard
Coulter Frame Tubing	7″ x 7″ Toolbar	7″ x 7″ Toolbar
Hydraulic Down Pressure	Standard	Standard
Standard Hydraulic Driven Pump	Ace Pump	Ace Pump
Optional Ground Driven Pump	John Blue	John Blue
Wheels	46″ w/IF380/90R46 Firestone Tires	46″ w/IF380/90R46 Firestone Tires
Transport Width	15′-0″	15′-0″
Transport Height	12′-6″	12′-6″
Transport Length	16′-8″	20′-8″
Pin To Axle	12′-0″	14′-0″
Flow Monitors	Optional	Optional
Depth Control Spools	Optional	Optional
Quick Fill	2″ Fill Standard - 3″ Fill Optional	2″ Fill Standard - 3″ Fill Optional
Wash Tank	Standard 9 Gallon Wash Tank	Standard 9 Gallon Wash Tank
Empty Weight	10,500 lbs.	10,900 lbs.
Tongue Weight Empty	2,700 lbs.	2,800 lbs.
Tongue Weight Loaded	2,900 lbs.	3,000 lbs.

* Other Row Spacing Available Upon Request

⚠ATTENTION! BECOME ALERT! YOUR SAFETY IS INVOLVED!⚠

Safety is a primary concern in the design and manufacture of our products. Unfortunately, our efforts to provide safe equipment can be erased by an operator's single careless act. In addition, hazard control and accident prevention are dependent upon the awareness, concern, judgment, and proper training of personnel involved in the operation, transport, maintenance and storage of equipment.

Make certain that the operator(s), prior to operating is instructed in safe and proper use and reviews and understands the manual(s) pertaining to this machine.

Read this manual before you operate this machine. If you do not understand any part of this manual, or need more information, contact the manufacturer or your authorized dealer.

⚠SAFETY⚠

Understand that your safety and the safety of other persons is measured by how you service, and operate this machine. Know the positions and functions of all controls before you try to operate them. Make sure to check all controls in a safe area before starting your work.

The safety information given in this manual does not replace safety codes, federal, state or local laws. Make certain your machine has the proper equipment as designated by local laws and regulations.

A frequent cause of personal injury or death is from persons falling off equipment and being run over. Do not permit persons to ride on this machine.

Travel speeds should be such that complete control and machine stability is maintained at all times. Where possible, avoid operating near ditches, embankments and holes. Reduce speed when turning, crossing slopes and rough, slick or muddy surfaces.

Collision of high speed road traffic and slow moving machines can cause personal injury or death. On roads, use flasher lights according to local laws. Keep slow-moving-vehicle emblem visible. Pull over to let faster traffic pass.

Keep all safety shields in place.

Keep hands, feet, hair and clothing away from moving parts while unit is in operation.

Make sure that everyone is clear of equipment before applying power or moving the machine.

Make sure that the implement is fastened securely to the tractor by using the proper hitch pin, clip and safety chains.

Do NOT exceed speeds in excess of 20 MPH. Also be sure slow moving vehicle emblem is attached to rear of transport.

Before unhooking the implement from the towing unit, be sure to properly block the wheels to prevent the implement from moving. Be sure the jack assembly is positioned in the park position and the weight has been transferred to the jack assembly before unhooking the implement.

Avoid high pressure fluids. Escaping fluid under pressure can penetrate the skin causing serious injury. Always relieve pressure before disconnecting hydraulic lines. Wear proper hand and eye protection when searching for leaks. Use wood or cardboard instead of hands. Keep all components in good repair.

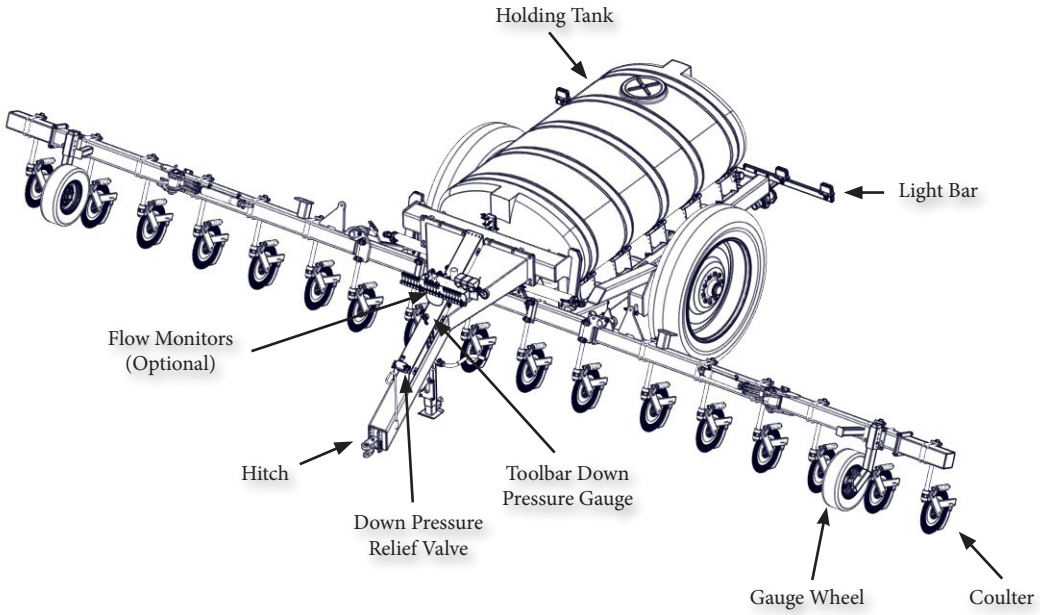
Holding Tank
Light Bar
Flow Monitors
(Optional)
Hitch
Toolbar Down
Pressure Gauge
Down Pressure
Relief Valve
Gauge Wheel
Coulter

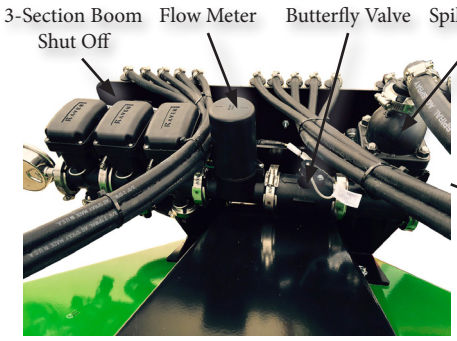
3-Section Boom
Shut Off
Flow Meter
Butterfly Valve
Spike Valve

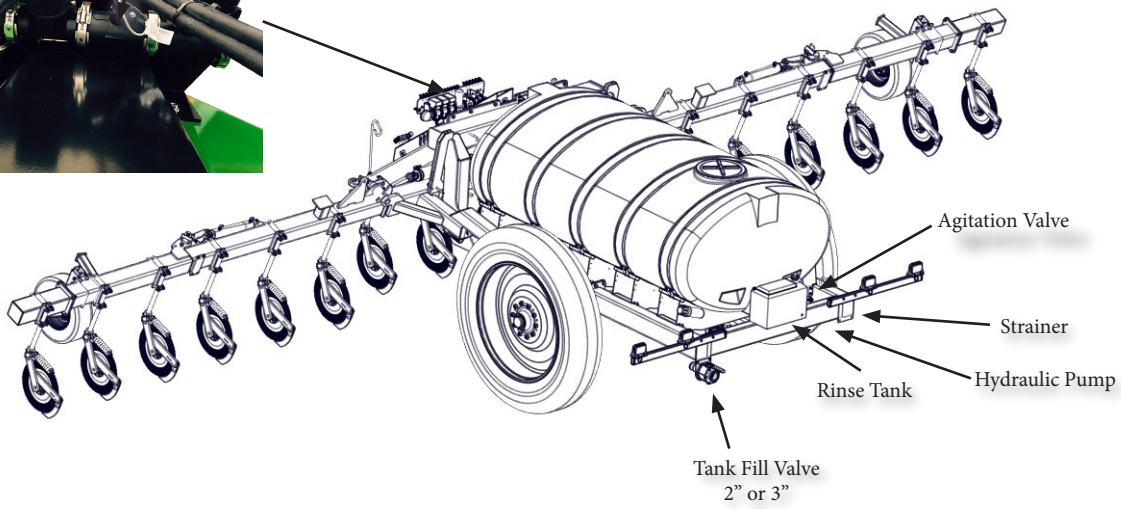
Agitation Valve
Strainer
Hydraulic Pump
Rinse Tank
Tank Fill Valve
2” or 3”

Flow Monitors

Optional Flow Monitors are available to allow the operator to see the rate of flow to each coulter through a floating ball located inside the transparent inspection tube. Each coulter is connected with a separate supply hose.

Down Pressure Relief Valve

The Down Pressure Relief Valve provides adjustable hydraulic pressure to force the coulters on the wings into the ground while allowing the wing to flex up and down as needed to follow the contour of the ground.

Clockwise = Increased Pressure

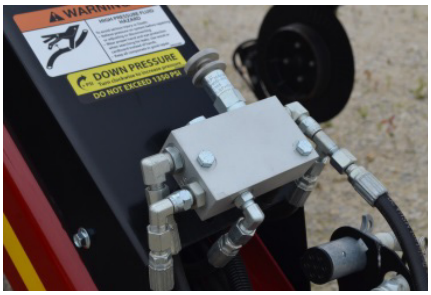

Tool Bar Down Pressure Gauge

IMPORTANT - Do Not Exceed 1,350 PSI on the Down Pressure Gauge.

It is **VERY IMPORTANT NOT TO EXCEED 1,350 PSI** of pressure on the Down Pressure Gauge. Doing so may cause damage to the inner wing fold cylinders. (See the Toolbar Down Pressure Gauge)

Counter Clockwise = Decreased Pressure

Hydraulic Pump

IMPORTANT - Do Not Exceed 7 Gallons Per Minute Max Hydraulic Fluid Input.

The Nitro-Gro Applicator is equipped with the Ace FMC-150-HYD-206 pump. This pump requires 7 GPM maximum hydraulic fluid input.

The Hydraulic Pump is located at the rear of the unit below the tank and near the tank outlet to provide faster pump priming and prevent cavitation.

Turn the hydraulic flow of the tractor all the way down before you put the hydraulic fertilizer pump into use. The applicator pump only requires 7 GPM of hydraulic flow to make 120 GPM of fertilizer flow. If you don't turn down the tractor hydraulic flow to the pump, damage will occur. (See Set-Up Instructions in the pump manual.)

Coulter

The number of coulters is determined by the number of rows (usually one less or one more). So the number of rows will be even, and the number of coulters will be odd, since you are placing the nitrogen between the rows. Example, a 16 row unit will have either 15 or 17 coulters. A 16 row applicator with 15 coulters is considered a "one-down" unit. Similarly, a 16 row applicator with 17 coulters is considered a "one-up" unit.

Hand Wash Tank

Hand Wash Tank allows user to clean chemicals spills from their hands quickly and easily.

Transport Latches

The Transport Latches are designed for safe transport. When the Transport Latches are resting on the Main Frame and the pins are installed, the Nitro Gro Applicator can not lower.

Shut-Off & Fill Valve

The Nitro-Gro Applicator is standard equipped with a 2” Shut-Off and Fill Valve. There is an upgrade option for a 3” Shut-Off and Fill Valve. The 3” Valve will allow a quicker fill.

Strainer

The Nitro-Gro Applicator is standard equipped with a strainer designed to remove dirt and debris from the fertilizer to prevent downstream clogs.

Agitation Valve (Hydraulic Pump Units Only)

The Agitation Valve is designed to allow air to escape from the pump so it can easily prime. When you're running in the field, a little liquid runs through the Agitation valve back to the tank. (You will need to adjust the amount of agitation.)
The Agitation Valve can also be used to evenly mix additives by running the pump with the electronic control valves closed.

Optional Ground Drive Pump

The John-Blue Ground Drive pump comes in either single or double piston configuration. It does not require any control valves. The rate is controlled by an adjustment on the pump and it naturally compensates for different speeds since it is driven off of the main frame wheel.

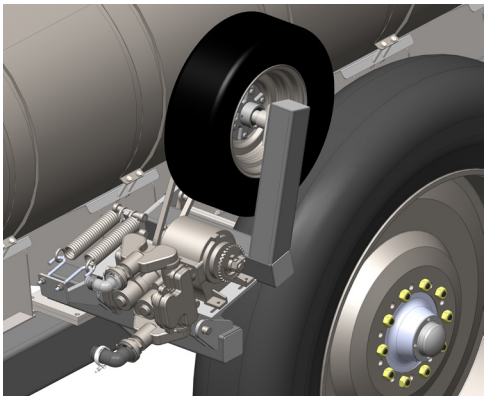

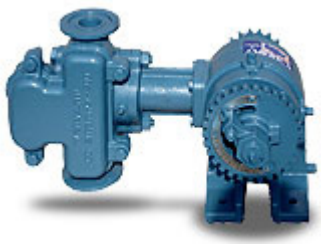

PREPARING THE NITRO-GRO APPLICATOR:

IMPORTANT - Before putting the applicator into operation, check the machine for damaged or worn parts and replace as necessary.

Only use a tractor with sufficient power and weight to operate the applicator.(For 16 Row 170 HP, 12 Row 130HP) Be sure the applicator is properly attached to the tractor, the pin is properly secured, and (if equipped) the safety chain(s) are properly installed. Inspect all safety decals for visibility and remove any debris.

Lights and SMV:
The SMV Emblem has to be positioned with a point of the triangle upward and as near to the rear and centered or as near to the left of center of the unit as practicable. Also the SMV emblem needs to be located two to ten feet above the ground measured from the lower edge of the emblem. Before transporting make sure that all of the lights, reflectors and the SMV emblem are clean and visible.

Hardware:
Make sure all hardware is properly fastened according to the Bolt Torque chart found in this manual. Recheck all hardware for tightness after the unit has been operated for several hours. Check that all pins and retaining rings are in good condition. Replace any pins or retaining rings that are worn, damaged or missing.

Hydraulic Hoses:
Check the hydraulic hoses to make sure they are not rubbing against sharp edges, are not kinked and not twisted. Hoses should be secured to the applicator with nylon tie straps. Check hoses and fittings for hydraulic leaks. Tighten or replace as necessary.

Lubrication:
Lubricate the Nitro-Gro applicator according to the Lubrication Schedule outlined in the SERVICE section of this manual.

Tires and Wheels:
Check the tire pressure in the transport tires and make sure the tire pressure is equal. The recommended tire pressure is 64 PSI. Make sure the wheel lug nuts are tightened to 400 Ft. Lbs. Check the wheel lug nuts before initial operation and after the unit has been operated for several hours to ensure the lug nuts remain tight. Make sure the pressure of the Gauge Wheels is 45 PSI and the (optional) Ground Drive Pump Tire is 15PSI. Tighten the Gauge Wheel and Drive Pump Tire lug nuts to 121 Ft.Lbs.

Filling the tank:
Make sure the area is clear of bystanders when filling the tank. Always wear protective clothing, gloves, and masks when handling fertilizer/chemicals. Follow the fertilizer/chemical manufacturers instructions exactly when filling the tank. Keep the lid on at all time to keep debris out of the tank.

Fertilizer Pump:
Raise the toolbar with wings unfolded and turn on the fertilizer pump. Check that there is liquid coming out of each injector. Clean injectors if necessary. Replace injectors accordingly. (If equipped with Ground Driven Pump, raise coulters out of the ground and spin the drive wheel by hand.)

Unfolding the Wings:
It is recommended unfolding the side wings in the field. Keep all bystanders away while unfolding the wings.

Hitching and Unhitching the Applicator

Connect the applicator to the tow vehicle using a hitch pin and make sure a retaining pin is secured in the hitch pin. Always attach the safety chains to the applicator and the tow vehicle.

⚠**WARNING – Before unhooking the applicator, unpin the jack from storage position, and lock it in the usage position lower the jack stand to the ground until weight of the applicator is transferred to the jack. Keep hands and feet away from the jack stand when lowering.**

Remove the Hitch Pin and unhook the safety chains.

⚠**WARNING – Always relieve hydraulic system pressure before disconnecting hoses from tractor or servicing hydraulic system. See the tractor's operators manual for proper procedures. Disconnect the hydraulic hoses. Install dust covers over the hose plugs and outlets.**

When not in use the jack handle is stored under the tongue.

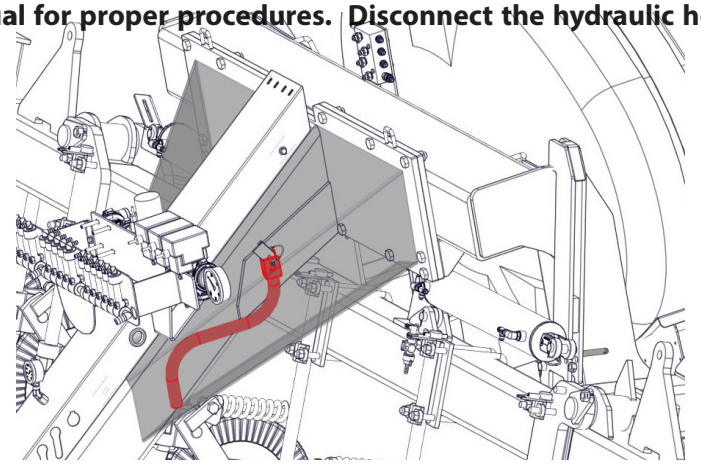

Connecting the Hydraulic Hoses

Connect the hoses so that the toolbar raises when the tractor control lever is pulled back and lowered when the control is pushed forward.

Hook up hydraulic lines.
Set #1 - Green Hoses - *Raise & Lower/ Wing Kick/ Down-pressure*
Set #2 - Red Hoses -*Wing Fold*
Set #3 - Black Hoses - *Hydraulic Pump (Hook the return hose to low pressure return port at the tractor)*

Transporting

Comply with ALL state and local laws governing highway safety and regulations when moving machinery on public roads. Be sure an SMV (Slow Moving Vehicle) emblem is in place and clearly visible on the rear of the applicator. The SMV Emblem has to be positioned with a point of the triangle upward and as near to the rear and centered or as near to the left of center of the unit as practicable. Also the SMV emblem needs to be located two to ten feet above the ground measured from the lower edge of the emblem. Make sure all lights are clearly visible and working properly BEFORE highway travel. Be sure the amber, red and orange retro-reflective tape on the implement is in place and clearly visible.

The transport speed should not exceed 10 MPH in the field or over rough terrain. Highway transportation speed should not exceed 20 MPH Reduce transport speed when necessary to maintain full control of the implement at all times.

The ground drive pump transport lock should be in place before transporting the Nitro-Gro.

The toolbar transport locks should have the locking pins in place before transport.

Fertilizer Pump

Your Nitro-Gro Applicator is equipped with the Ace FMC-150-HYD-206 pump.

Note: Refer to the pump's owners manual to regulate the hydraulic flow to the pump.

Attach the pump hydraulic hoses to the tractor so the pump operates in the lower/retract position. The pump can then be turned off in the forward "float" position. Turning the pump off in "float" instead of "neutral" allows the hydraulic system pressure to equalize and prevents the occurrence of damaging pressure spikes.

The return line should be connected to a low pressure return port if available. The low pressure return port routes oil directly to the reservoir minimizing return line pressure. Low return line pressure extends the motor seal life and increases operating efficiency.

⚠WARNING- Failure to regulate oil flow will cause motor failure.

Note: Refer to the pump's owners manual to locate your tractor model and follow the appropriate setup instructions.

⚠WARNING- Not a suitable pump for flammable liquids.

Folding & Unfolding

- Raise the toolbar to take the weight off of the transport latches and unpin the transport latch/wing
- Unfold the wing assemblies. On 40ft units, one cylinder will unfold the inner wing section and another cylinder will unfold the outer wing section. The inner wing will automatically fold to the wing "kick-up" position, then unfold the outer wing section until it is in alignment with the inner wing section
- (Pre 2017 Models) After the outside wing is unfolded, lower the center toolbar to the ground. The center section will lower first until the toolbar raise/lower cylinders reach the cylinders stops which sets your depth. As soon as the cylinder stops against the cylinder spacers, pressure will build and allow the wing kick cylinder to fold the winds down parallel with the center section.
- (2017 & Newer) After the outside wing is unfolded, lower the toolbar to the ground, adjust the flow control on the down pressure cylinder so the wing coulters come into contact with the ground at the same time as the center coulters.
- When you raise the unit up, the entire toolbar raises up until the toolbar raise/lower cylinders are fully extended, then the wings will start to fold to the kick-up wing position.
- Once the wings are in the kick-up position the outside wing section can be folded against the inside wing section. After the inside and outside wing sections are folded together, the wings can continue to be folded until the transport Latch/Wing Rest is engaged against the center base weldment.
- Slightly lower the toolbar to allow some weight to transfer the Transport Latches/ Wing Rest. (Note: If you lower the toolbar too far the wing -kick cylinder will begin to extend and the wings will begin to unfold.)

Adjusting the Field Depth

- The center section of coulters should be set first. The Toolbar Cylinders have spacers included. Add or remove spacers until the center section is positioned at the appropriate depth. Lower the unit until the lift cylinders bottom out on the stroke control spacers. Add or remove stroke control spacers until the center toolbar section reaches desired application depth. It is a good idea to be moving forward when lowering the toolbar. When the center section of the toolbar is set to proper depth.

- After the toolbar is set with the cylinder spacers, adjust the wing gauge wheel setting until the wings are level with the base section and the entire toolbar is flat and even. Once the toolbar is set and leveled, further adjustment is typically not necessary.

Down Pressure

- Set the down pressure just high enough to keep the gauge wheels in contact with the ground. Excessive pressure can cause premature wear on wing pivots and gauge wheels.
- DO NOT EXCEED 1,350 PSI.

Wheel Spacing

- To set up the Applicator for 20" or 30" rows use the inside hole. This will set the wheel spacing at 120".

- To set up the Applicator for 22" rows use the outside hole. This will set the wheel spacing at 132".

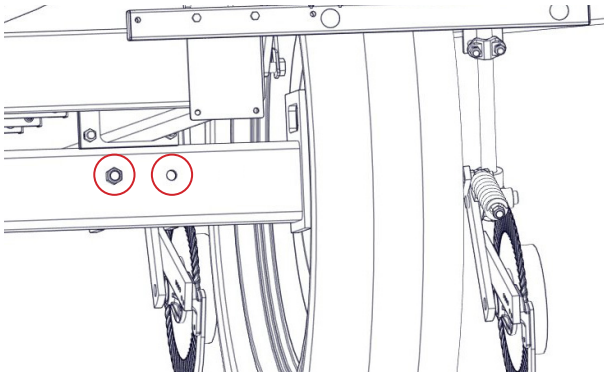

When shipped the light bar will be attached using holes A and B. The light bracket needs to be positioned so that the Amber light is out past the wheel.

NOTE - When changing the wheel spacing it may be necessary to move the Light Brackets so the Amber Light is out past the wheel.

- For 20" and 30" row spacing use holes B and C.
- For 22" rows use holes C and D.

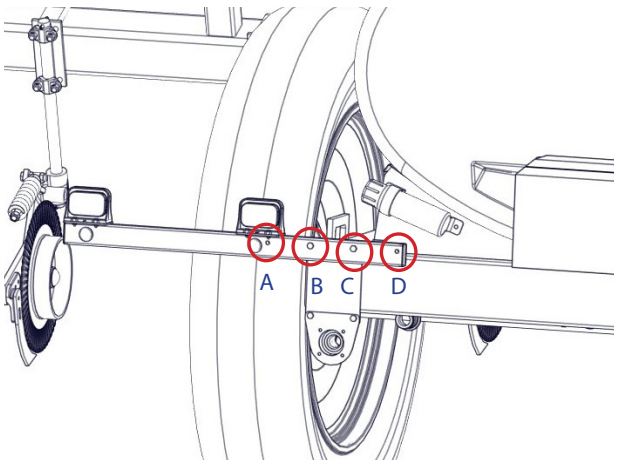

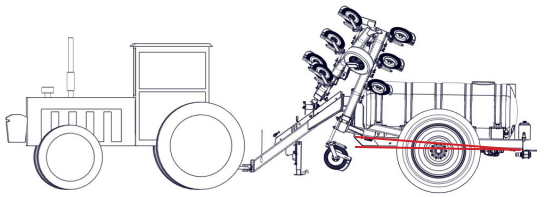

1) Hook tractor to Nitro-Gro and adjust hitch so that frame on applicator is level or tilting back slightly.

2) Hook up hydraulic lines.
Set #1 - Green Hoses - *Raise & Lower/ Wing Kick/ Down-pressure*
Set#2 - Red Hoses - *Wing Fold*
Set#3 - Black Hoses - *Hydraulic Pump*
IMPORTANT - For the black hoses hook the return hose to a low pressure return port at the tractor.

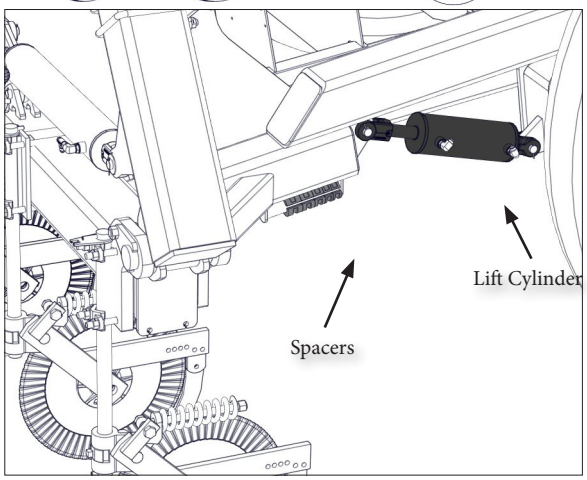

3) Raise the unit to relieve pressure on transport latches and wing rests. Remove transport latch pins and place in storage holes next to the lock holes.

4) Unfold the unit.

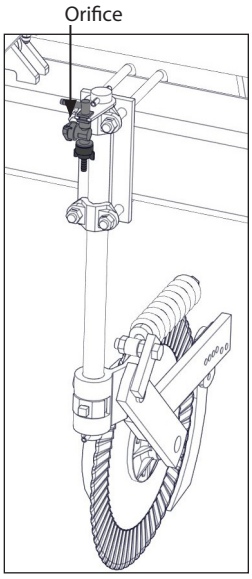

5) Lower the unit until the lift cylinders bottom out on the stroke control spacers. Add or remove stroke control spacers until the center toolbar section reaches desired application depth. It is a good idea to be moving forward when lowering the toolbar.

6) Adjust the wing Gauge wheels so that the coulters on the wings are at the same depth and the toolbar is level when lowered.

7) Using the desired rate of application (GPA) and speed of application (MPH), use the supplied orifice sizing chart on pages 50-51of this manual to determine which orifices will provide optimal application pressure. Install the orifices in the check valve unit above each row unit that is mounted on the coulter shaft.
NOTE – The unit will be either be set up to skip a row, "One Down", or re-apply the outside row,"One Up".
-If the unit is set up as "One Down" (11 or 15 coulters) then the outside coulters on each end of the unit will need to be 1.5x rate of the other coulters.
-If the unit is set up as "One Up" (13 or 17 coutlers) then the outside coulters on each end of the unit will need to be 0.5x rate of the other coulters.

8) Put some water in the tank and check for leaks.
IMPORTANT - Before proceeding to the next step make sure that the valve is open to the pump. NEVER run the pump dry.

9) With the valve to the pump open perform the initial setup of the pump as outlined in the pump owners manual. After the pump is set up recheck the applicator for leaks.

10) In-field adjustment of hydraulic down-pressure: Adjust so that the coulters are staying at desired depth with the least amount of hydraulic pressure necessary.
IMPORTANT - DO NOT exceed 1,350 PSI.

11) Adjust tractor hydraulic flow on the Raise and Lower/Wing Kick/Down-pressure circuit as low as possible while maintaining a reasonable toolbar raise and lower speed. This will help prevent creating excess heat in the hydraulic system as this circuit provides continuous toolbar down-pressure.

12) Fold the wings up for transport.
IMPORTANT - Be sure to have the toolbar fully raised before folding the wings up! Failure to do so will result in damage to the unit.

Initial Console Programming

HINT: If you enter the wrong value when entering your data press "ENTER" then press "ENTER" again and re-enter your value again.

- Select the unit of measure by pressing the CE button until the desired until of measure appears in the display and press "ENTER"
  NOTE - The unit of measure for the United States is Volume per Acre.
- Select the type of sensor being used (SP2) by pressing the CE button until the desired sensor type appears in the display and press "ENTER"
- The message "CAL C-SD STANDARD VALVE" will appear in the console's display. Press "ENTER"
- The message "CAL SELF TEST 00" will appear in the console's display. Press the BOOM CAL 1 button and enter the value shown in the table. To store the values press "ENTER" (the enter button will light up) input the value and then press "ENTER". Your value is now stored. Repeat for Boom 2 and 3. Use the arrow keys to advance to the remaining booms.

Boom #	12 Row	16 Row
Boom 1	105	165
Boom 2	150	150
Boom 3	105	165

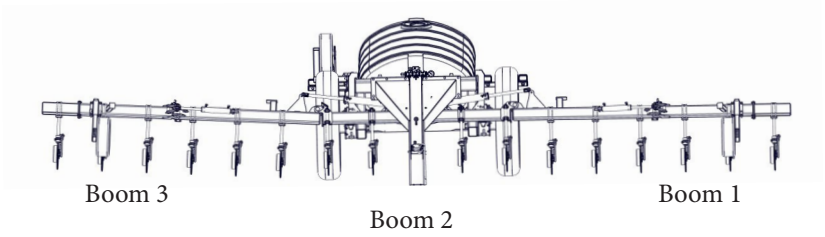

- Press the "SPEED CAL" button and input the appropriate speed cal. value for the type of sensor being used and press "ENTER"
  NOTE - For the PHOENIX 10 the speed cal. is 785.
- Press the "METER CAL" button and enter the meter cal. value stamped on the flow meter's identification tag.
  NOTE - The meter cal. value is 720 gallons.
- Press the "VALVE CAL" button and input the calibration number that corresponds with the control valve being used and press "ENTER".
  NOTE - For this unit the valve cal. is 2123.
- Press the "RATE 1 CAL" button and "ENTER" the Rate 1 value. Refer to the "Calculate the Rate 1 and Rate 2 Cal Values" section of the Raven SCS 440 manual and press "ENTER".
- Press the "RATE 2 CAL" button and "ENTER" the Rate 2 value. Refer to the "Calculate the Rate 1 and Rate 2 Cal Values" section of the Raven SCS 440 manual and press "ENTER".
- The initial console programming is now complete, and the flashing "CAL" in the console's display should turn off. If it does not, repeat the procedure starting from the first step above.
- These settings will be stored and the previous steps do not need to be repeated after powering OFF/ON.

RESET: If an entry or selection error is made during any steps of this procedure, turn the POWER switch to the OFF position, press CE and hold while turning the POWER switch to the ON position to reset the console.

HINT: If you enter the wrong value when entering your data press "ENTER" then press "ENTER" again and re-enter your value again.

Break In Period

First 30 minutes of operation:
1. Check that all coulters and nozzles are clean and working properly. Clean and adjust accordingly.
2. Check all hydraulic and chemical lines. Be sure none of them are kinked, pinched or leaking. Adjust lines accordingly.
3. Re-torque all of the wheel bolts.
4. Check all other fasteners and hardware. Adjust accordingly.
5. Lubricate all grease fittings.

After 4 hours of operation:
1. Check that all coulters and nozzles are clean and working properly. Clean and adjust accordingly.
2. Check all hydraulic and chemical lines. Be sure none of them are kinked, pinched or leaking. Adjust lines accordingly.
3. Re-torque all of the wheel bolts.
4. Check all other fasteners and hardware. Adjust accordingly.

After 10 hours of operation:
1. Check that all coulters and nozzles are clean and working properly. Clean and adjust accordingly.
2. Check all hydraulic and chemical lines. Be sure none of them are kinked, pinched or leaking. Adjust lines accordingly.
3. Re-torque all of the wheel bolts.
4. Check all other fasteners and hardware. Adjust accordingly.

After the 10 hours of operation break in period check, begin the standard maintenance schedule as described in the service section of this manual.

Troubleshooting

⚠WARNING - MAKE SURE THAT ALL POWER IS SHUT OFF BEFORE SERVICING THE APPLICATOR. MAINTENANCE AND REPAIR SERVICE WORK TO BE PERFORMED BY QUALIFIED SERVICEMEN ONLY.

Trouble...	Possible Cause...	Possible Remedy...
Wings only partially unfold	• Actuating raise/lower remote instead of fold/unfold remote	• Use fold/unfold remote
Toolbar will not lower	• Transport latch pins still in transport position • Pressure still on transport latches	• Remove and place field use position • Raise toolbar to relieve pressure on transport latches before lowering
Toolbar will not raise or lower Wings will not fold out or unfold	• Faulty hydraulic coupler	• Replace with new coupler
Center toolbar section too deep or too shallow	• Lift cylinders have improper combination of cylinder spacers	• Add or remove spacers as necessary
Wings are tilted up from center toolbar section	• Gauge wheels set too low • Hydraulic down pressure not set high enough • Center toolbar section set too deep	• Move gauge wheels up • Increase pressure be fore turning adjustment knob clockwise • Add cylinder spacers to lift cylinders
Wings are tilted down from center toolbar section	• Gauge wheels set too high • Center toolbar section set too shallow	• Move gauge wheels down • Remove cylinder spacers from lift cylinders
Fertilizer pressure gauge showing high pressure when applying fertilizer	• Orifices too small • Plugged knives • Kinked hoses • Speed too fast	• Install larger orifices • Clear debris • Adjust hoses as necessary • Slow down
Unable to maintain set application rate	• Clogged Strainer • Orifices too small • Agitation valve too far open	• Clean strainer • Install larger orifices • Adjust valve as necessary
Hydraulic pump will not prime	• Tank valve clogged • Agitation valve closed	• Unclog valve • Open valve

*Refer to the ACE hydraulic pump manual, raven controller manual, and CDS-John Blue pump manual for additional trouble shooting information.

Service

To prolong the life of your Nitro-Gro applicator, perform the following on a regular basis:

1. Grease coulter hubs, 2 pumps every 50 hours.
2. Check lighting before over the road transport. Make sure lights and SMV emblem are clean from dirt and field debris.
3. Check implement for damage, cracked welds, loosened hardware, etc. After the unit is repaired promptly repaint to prevent further damage.
4. Check hydraulic system for leaks and hose damage, twists or kinks and repair as needed.
5. Check fertilizer handling system for leaks and hose damage, twists or kinks and repair as needed.
6. Check tire pressures and lug nuts periodically and adjust as required.
7. Grease Wheel Hubs.
8. Grease jack.

Storage

To prolong the life of your Nitro-Gro applicator, perform the following before placing the implement in storage:

1. Remove dirt and debris that may cause rusting.
2. Repaint any areas where the paint has been chipped, scratched or worn away.
3. Coat all earth moving surfaces with a suitable rust preventative.
4. Inspect for damaged or worn parts and replace before next use.
5. Lubricate coulter hubs.
6. Replace all worn, torn and faded decals and reflectors.
7. Store the implement inside away from inclement weather.
8. Flush all fertilizer from the system.
9. Cover Flow Monitors from the sunlight. If the Flow Monitors are exposed to the sun for a long period of time they will turn cloudy and hard to see through.
10. To winterize your Nitro-Gro you need to drain the tank and all fertilizer hoses. Once the system is drained add Marine RV Anti Freeze. Run the Anti Freeze thru the strainer, valves, check valves, and the orifices.

Safety Signs

⚠ATTENTION! BECOME ALERT! YOUR SAFETY IS INVOLVED!⚠

Replace Immediately If Damaged or Missing

#	Description: Decals	Part. No.
1	Grease Decal	JM0015104
2	Warning - Pinch Point	JM0014994
3	Down Pressure Decal	JM0035892
4	Warning - Insert Pin Before Road Transport	JM0038103
5	Danger - Electrocution Hazard	JM0035887
6	Caution - Observe Instructions	JM0035881
7	Danger - Crushing Hazard	JM0035883
8	J&M Oval	JM0038110
9	Warning - Towing Stability	JM0035882
10	Warning - High Pressure Fluid	JM0035880
11	NitroGro with J&M Decal	JM0039474
12	Open Tank Maintenance Valve	JM0039478
13	Close Tank Fill Valve	JM0035891
14	Open Agitation Valve	JM0039479
15	Check Filter Daily	JM0035884
16	Ground Drive Adjustment	JM0038102
17	Ground Drive Tire Pressure	JM0038101
18	2.0 x 9.0 Red Reflective Strip	JM0009945
19	2.0 x 9.0 Fluorescent Orange Strip	JM0009944
20	Nitrogro Logo5010L	JM0038114
20	Nitrogro Logo5010R	JM0038116
20	Nitrogro Logo5016L	JM0038117
20	Nitrogro Logo5016R	JM0038118
21	NitroGro Decal	JM0039473
22	J&M Website	JM0038108
23	2.0 x 9.0 Reflective Amber Strip	JM0009946
24	Jack Handle Storage	JM0038105
25	Warning - Cylinder Stops	JM0035890
26	Check Tire Pressure	JM0038097
27	Tighten Lug Nuts	JM0035885

Safety Signs

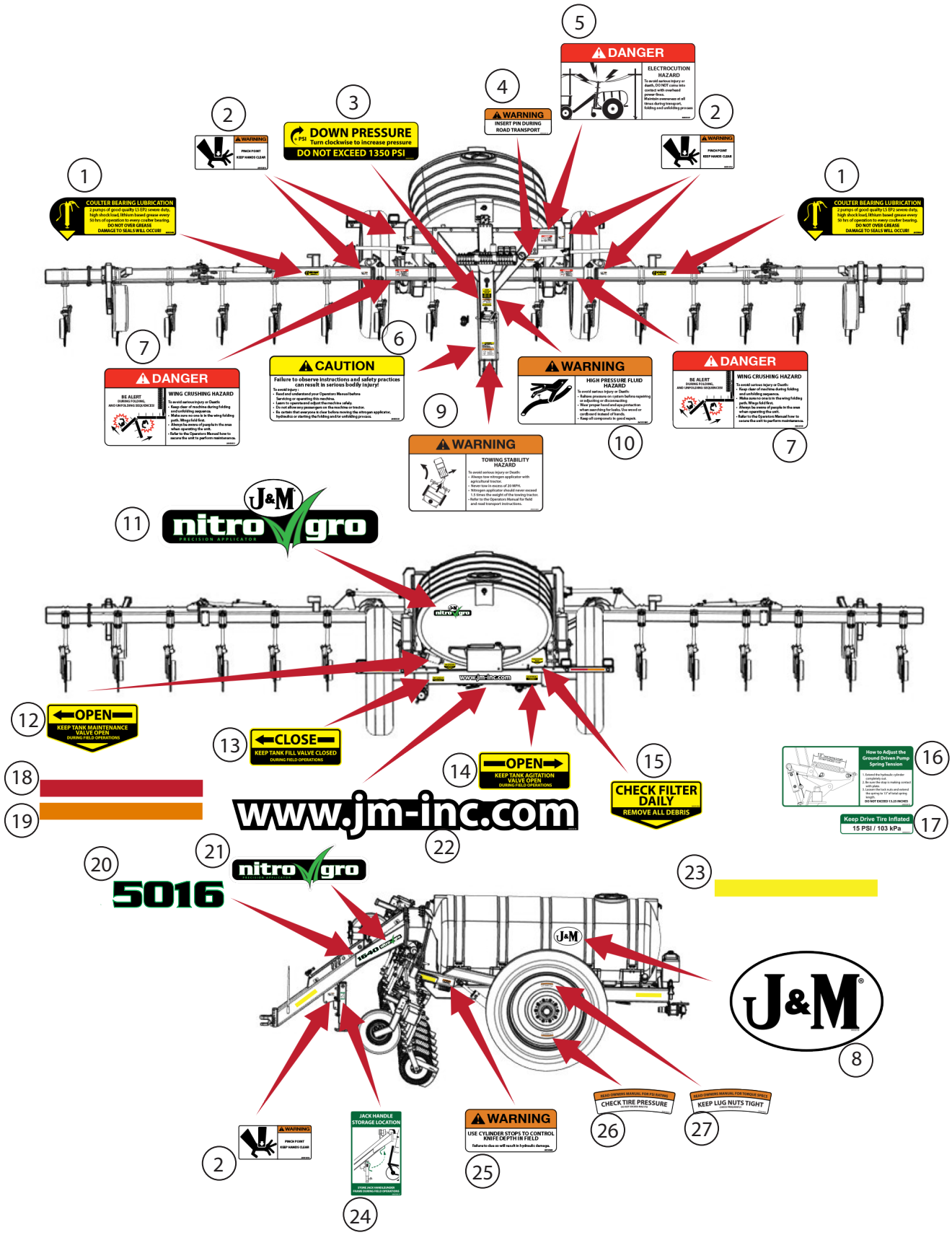

5000 Flow Monitor

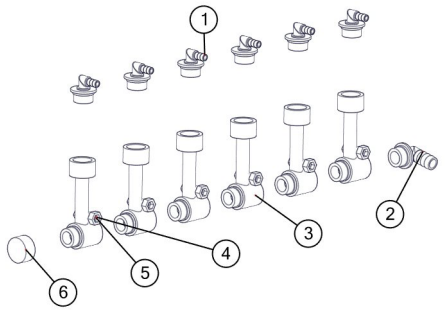

6 Row Flow Indicator Manifold

#	Description	Part. No.
1	20511-00 O-Ring x .38in Hose Barb 90 Deg	JM0024469
1	3/8 Hose Clamp (Not Shown)	JM0039206
2	20513-00 O-Ring x .75in Hose Barb 90 Deg	JM0024468
2	3/4 Hose Clamp (Not Shown)	JM0039205
3	20460-00 Flow Indicator	JM0021569
4	1/4”-20 Gr5 Z Centerlock Hex Nut	JM0001505
5	1/4”-20 x 2” Gr5 Z Hex Bolt	JM0001591
6	20521-00 O-Ring Cap - Flow Indicator	JM0021579

*Same parts for the 3,4, 5 Row Flow Indicator Manifold

5000 Manifold (Hydraulic Pump Only)

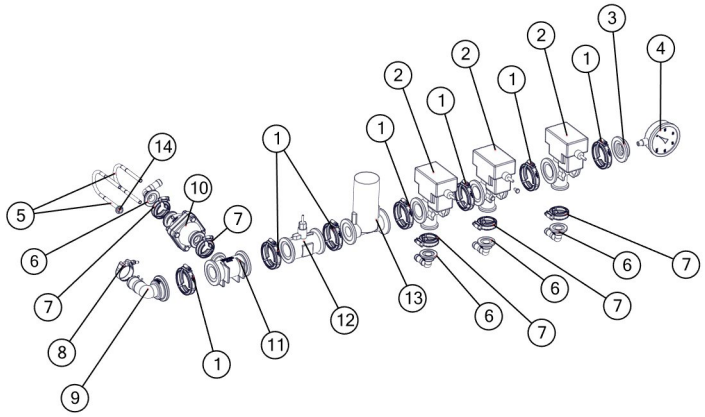

Note: Each Flange Clamp requires a Gasket. The Gaskets are not shown. The Gaskets are listed below the Clamps.

#	Description	Part. No.
1	2" Manifold Flange Clamp	JM0035251
1	2” Manifold Gasket (Not Shown)	JM0021145
2	Raven Boom Valve	JM0032478
3	Banjo 2" Manifold Plug With 1/4" NPT for Gauge	JM0021147
4	Pressure Gauge Stainless Steel 0-100psi, 4"	JM0036636
5	3/8” Round U-Bolt 2” Pipe Size Extended	JM0018627
6	1" Flange x 90 deg. 3/4" Hose Barb	JM0032501
6	3/4 Hose Clamp (Not Shown)	JM0039205
7	1" Manifold Flange Clamp	JM0032496
7	1” Manifold Gasket (Not Shown)	JM0035239
8	Hose Clamp - 1 1/2” Hose	JM0021189
9	2" Manifold Flange x 90 deg. 1-1/2" Hose Barb	JM0034352
10	100psi Spike Valve With 1" Manifold Flanges	JM0032499
11	2" Manifold Tee X 1" Manifold	JM0035116
12	Raven Flow Meter RFM60P	JM0032488
13	Raven Control Valve	JM0032490
14	3/8 -16 Gr5 Z SF Hex Nut	JM0002152

5000 Pressure Gauge & Shroud

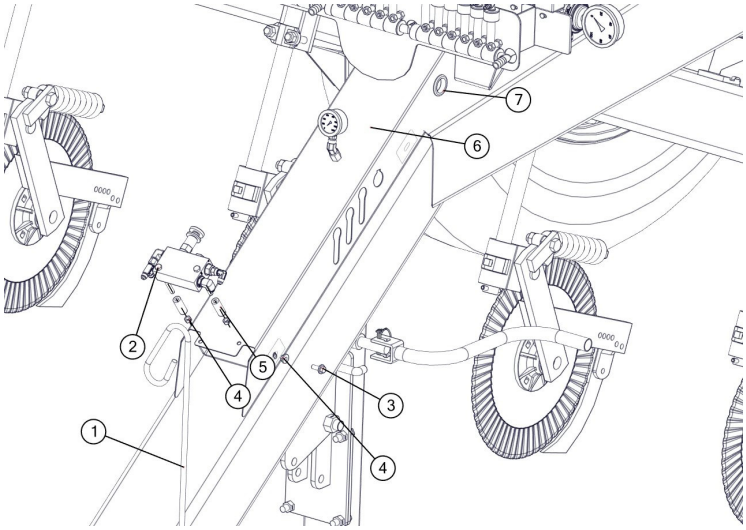

#	Description	Part. No.
1	1/2" Hose Holder	JM0027120
2	3/8"-16 x 4" Gr5 Z Hex Bolt	JM0002098
3	3/8”-16 x 1” Gr5 Z SF Hex Bolt	JM0002092
4	3/8"-16 Gr5 Z Centerlock Hex Nut	JM0001512
5	3/4 DIA x .385 x 2.0	JM0002444
6	Hose Shroud - Tongue	JM0034836
7	1 1/2 ID x 0.188 GW x 1 3/4 GD Grommet	JM0016924

5000 Tank

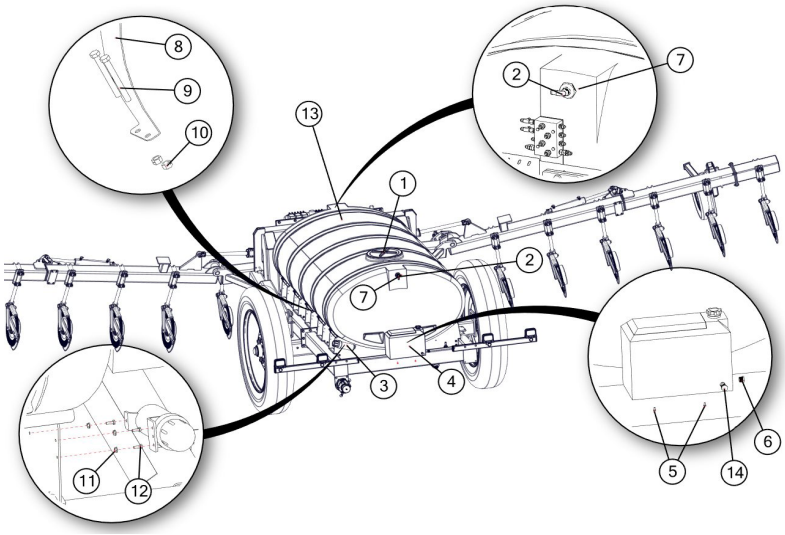

#	Description	Part. No.
1	16in Fertilizer Tank Lid With Vent	JM0037949
2	3/4" Hose Barb X 3/4 Male NPT 90 Deg(Hyd Pump)	JM0035226
2	3/4” Hose Clamp (Not Shown)	JM0039205
3	Manual Canister	JM0010115
4	9 Gallon Safety/Fresh Water Tank	JM0030587
5	1/4”-20 x 1/2” Gr5 Z Hex Bolt	JM0001481
6	3/4” NPT PVC Threaded Plug Schedule 40	JM0037251
7	3/4” NPT Bulkhead Tank Flange ASM(Hyd Pump)	JM0035222
8	Band For Elliptical Norwesco Tank	JM0030208
9	1/2”-13 X 4.5 Gr5 Z Hex Bolt	JM0008548
10	1/2”-13 Gr5 Z Centerlock Hex Nut	JM0001511
11	1/4”-20 Gr5 Z SF Hex Nut	JM0001630
12	1/4”-20 x 3/4” Gr5 Z Hex Bolt	JM0001507
13	Norwesco Elliptical Tank 1,000 Gallon	JM0027371
13	Norwesco Elliptical Tank 1,600 Gallon With Sump	JM0027372
14	Drum Faucet - 3/4” NPT	JM0039066

5000 Fill Valve 2” & 3”

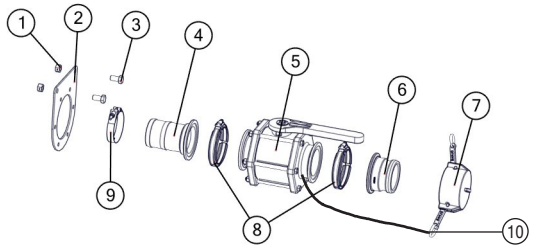

#	Description (3” Quick Fill)	Part. No.
1	1/2"-13 Gr5 Z Centerlock Hex Nut	JM0001511
2	Ball Valve Mount Plate 3" Banjo	JM0034894
3	1/2-20 x 1 Gr5 Z Hex Bolt	JM0028442
4	3" Manifold Flange to 3" Hose Barb	JM0021244
5	Ball Valve - 3" Full Port Flange Manifold	JM0021230
6	3" Manifold Flange x 3" QDC Male	JM0035205
7	3" Poly Cam Lever Cap	JM0035206
8	3” Manifold Flange Clamp	JM0035237
8	3” Manifold Gasket(Not Shown)	JM0021239
9	T-Bolt Hose Clamp 3” Hose	JM0035248
10	Lanyard	JM0039282

#	Description (2” Quick Fill)	Part. No.
1	1/2"-13 Gr5 Z Centerlock Hex Nut	JM0001511
2	Ball Valve Mount Plate 2"FP Banjo	JM0034889
3	1/2-20 x 1 Gr5 Z Hex Bolt	JM0028442
4	2"FP Manifold Flange to 2" Hose Barb	JM0033796
5	Ball Valve - 2"FP Flange Manifold	JM0031370
6	2"FP Manifold Flange x 2" QDC Male	JM0035249
7	2" Poly Cam Lever Cap	JM0035250
8	2”FP Manifold Flange Clamp	JM0035251
8	2”FP Manifold Gasket(Not Shown)	JM0021145
9	T-Bolt Hose Clamp 2” Hose	JM0035247
10	Lanyard	JM0039282

5000 Tank Fittings for 2” & 3”

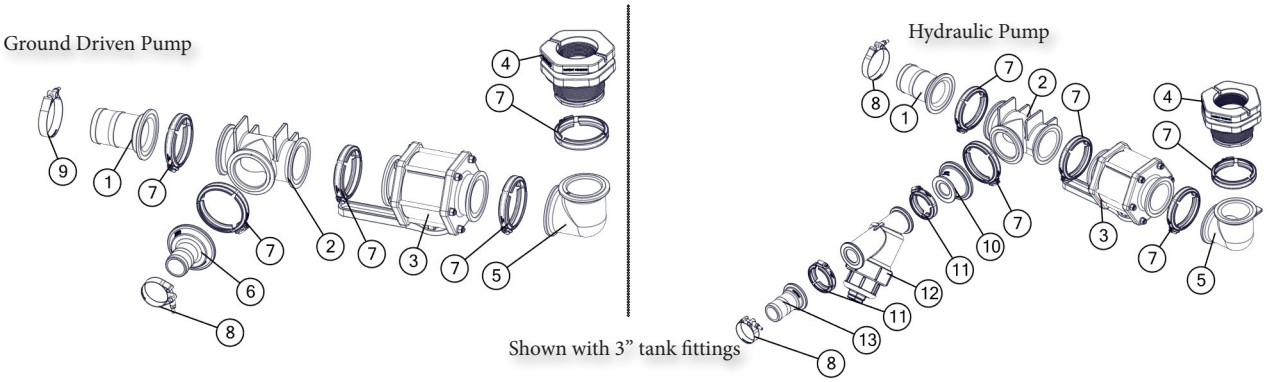

#	Description (3” Quick Fill)	Part. No.
1	3" Manifold Flange to 3" Hose Barb	JM0021244
2	Manifold Tee - 3"	JM0021232
3	Ball Valve - 3" Full Port Flange Manifold	JM0021230
4	3" x 3" Manifold EPDM Flange Bulkhead Fitting	JM0035114
5	90 Deg Coupling, 3" Manifold Flange	JM0033979
6	3" Manifold Flange x 2" Hose Barb	JM0034333
7	3” Manifold Flange Clamp	JM0035237
7	3” Manifold Gasket(Not Shown)	JM0021239
8	T-Bolt Hose Clamp 2” Hose	JM0035247
9	T-Bolt Hose Clamp 3” Hose	JM0035248
10	3” Manifold x 2” Manifold Flange Reducer Coupling	JM0035130
11	2”FP Manifold Flange Clamp	JM0035251
11	2”FP Manifold Gasket(Not Shown)	JM0021145
12	Manifold Y Strainer - 2” Flange, 30 Mesh	JM0033803
13	2” Manifold Flange x 2” Hose Barb	JM0035137

#	Description (2” Quick Fill)	Part. No.
1	2"FP Manifold Flange to 2" Hose Barb	JM0033796
2	Manifold Tee - 2"FP	JM0033797
3	Ball Valve - 2"FP Flange Manifold	JM0031370
4	2" x 2"FP Manifold EPDM Flange Bulkhead Fitting	JM0033793
5	90 Deg Coupling, 2"FP Manifold Flange	JM0033795
6	2"FP Manifold Flange x 2" Hose Barb	JM0033796
7	2”FP Manifold Flange Clamp	JM0035238
7	2”FP Manifold Gasket(Not Shown)	JM0035278
8	T-Bolt Hose Clamp 2” Hose	JM0035247
10	2” Full Port Manifold x 2” Manifold Flange Coupling	JM0035131
11	2” Manifold Flange Clamp	JM0035251
11	2” Manifold Gasket(Not Shown)	JM0021145
12	Manifold Y Strainer - 2” Flange, 30 Mesh	JM0033803
13	2” Manifold Flange x 2” Hose Barb	JM0035137

5000 Strainer & Hydraulic Pump

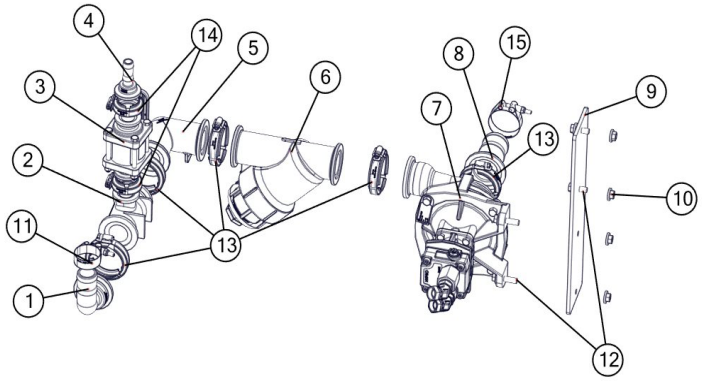

#	Description	Part. No.
1	2" Manifold Flange x 90 deg 1-1/2" Hose Barb	JM0034352
2	2" Manifold Tee x 1" Manifold	JM0035116
3	Ball Valve - 1" Manifold Flange	JM0033824
4	1" Flange x 3/4" Hose Barb	JM0021401
4	3/4” Hose Clamp(Not Shown)	JM0039205
5	90 Deg Coupling - 2" Manifold Flange	JM0033991
6	Manifold Y Strainer - 2" Flange, 30 Mesh	JM0033803
7	Pump - Centrifugal	JM0033798
8	2" Hose Barb x 2" Full Port Manifold Flange	JM0033796
9	Plate - Hyd Fertilizer Pump Mounting	JM0034960
10	3/8-16 Gr5 Z SF Hex Nut	JM0002152
11	T-Bolt Hose Clamp 1 1/2” Hose	JM0021189
12	3/8"-16 x 1-1/2" Gr5 Z SF Hex Bolt	JM0001633
13	2” Manifold Flange Clamp	JM0035251
13	2” Manifold Gasket (Not Shown)	JM0021145
14	1” Flange Clamp	JM0032496
14	1” Manifold Gasket (Not Shown)	JM0035239
15	T-Bolt Hose Clamp 2" Hose	JM0035247
15	T-Bolt Hose Clamp 3” Hose	JM0035248

5000 Flow Control Mount (Hydraulic Pump Only)

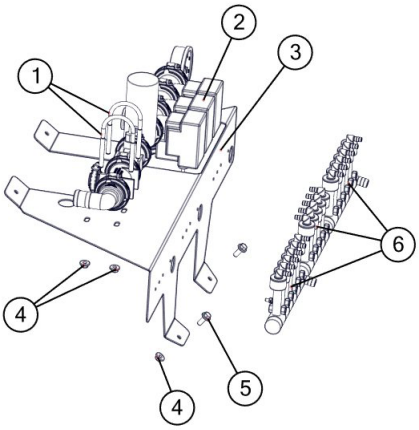

#	Description	Part. No.
1	3/8” Round U-Bolt 2” Pipe Size Extended	JM0018627
2	Raven FC CV SV ASM W-Fittings (Assembly)	JM0038228
3	Mount for Flow Control Valves	JM0040083
4	3/8”-16 Gr5 Z SF Hex Nut	JM0002152
5	3/8"-16 x 1" Gr5 Z SF Hex Bolt	JM0002092
6	Flow Indicator Manifold - 6 row with 3/4” inlet and 3/8” outlets	JM0024470
7	Flow Indicator Manifold - 5 row with 3/4” inlet and 3/8” outlets	JM0021591
7	Flow Indicator Manifold - 4 row with .75 inlet and .38 outlets(Not Shown)	JM0039279
7	Flow Indicator Manifold - 3 row with .75 inlet and .38 outlets(Not Shown)	JM0039280

5000 Check Valve

#	Description	Part. No.
1	Diaphragm Check Valve 3/8" Hose Single	JM0036383
1	Diaphragm Check Valve 3/4” Hose Tee	JM0036379
1	Diaphragm Check Valve 3/4” Hose Single	JM0036381
1a	3/8” Hose Clamp (Not Shown)	JM0039206
1b	3/4” Hose Clamp (For the 3/4” Diaphragm Check Valve)	JM0039205
2	Orifice (Not used with injectors)	Specify pg 55
3	Seat Gasket	JM0036372
4	Outlet Hose Barb, 3/8" Poly	JM0036368
4	3/8” Hose Clamp (Not Shown)	JM0039206
5	Quickjet Cap, Black	JM0036371
6	Diaphragm Check Valve 3/4” Hose Tee Assembly	JM0041782
7	Diaphragm Check Valve 3/4” Hose Single Assembly	JM0041783
8	Diaphragm Check Valve 3/8” Hose Single Assembly	JM0037890

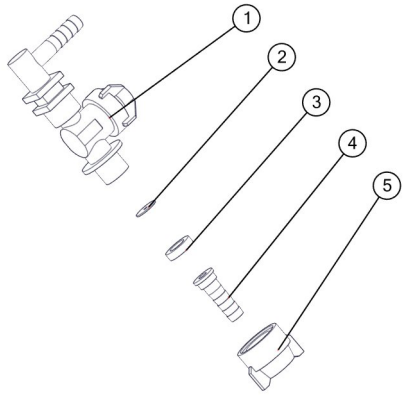

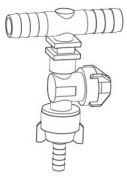

3/4” Tee Assembly (6)

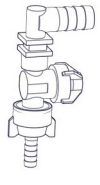

3/4” Single Assembly (7)

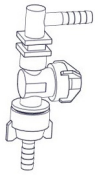

3/8” Single Assembly (8)

5000 Ground Driven Pump Manifold

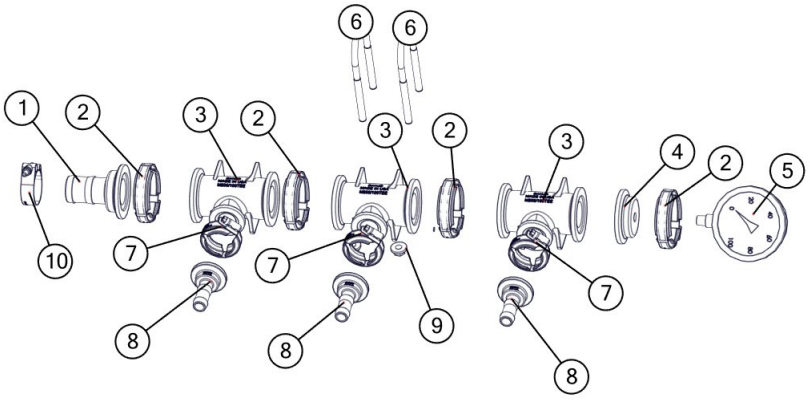

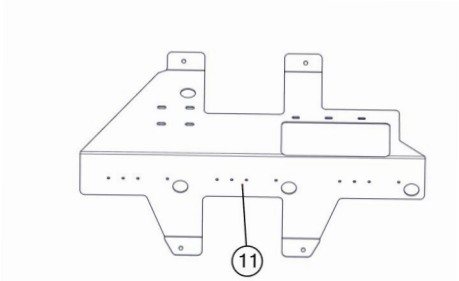

#	Description	Part. No.
1	2" Manifold X 1-1/2" Barb	JM0021161
2	2" Manifold Flange Clamp	JM0035251
2	2" Manifold Gasket(Not Shown)	JM0021145
3	2" Manifold Tee x 1" Manifold	JM0035116
4	2" Manifold Plug With 1/4" NPT for Gauge	JM0021147
5	Pressure Gauge Stainless Steel 0-100psi, 4", 1/4" NPT	JM0036636
6	3/8 x 16 Round U-Bolt 2in Pipe Size Extended	JM0018627
7	1" Manifold Flange Clamp	JM0032496
7	1" Manifold Gasket With Rib EPDM(Not Shown)	JM0035239
8	1" Flange x 3/4" Hose Barb	JM0021401
8	3/4” Hose Clamp(Not Shown)	JM0039205
9	3/8-16 Gr5 Z SF Hex Nut	JM0002152
10	1-1/2” T-Bolt Clamp	JM0021189
11	Flow Monitor Mount	JM0040083

5000 Ground Drive Pump

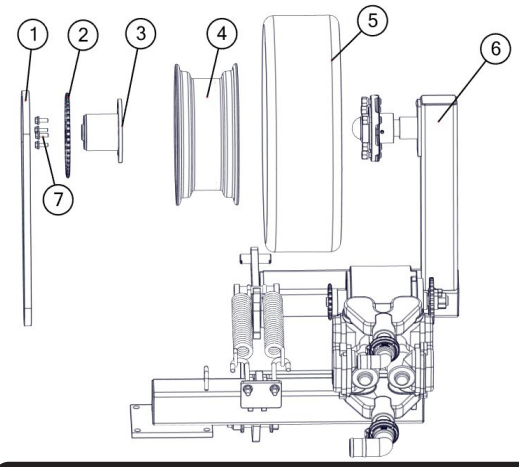

#	Description	Part. No.
1	Roller Chain #50	JM0034463
2	50A45 Sprocket #50 Roller Chain	JM0034459
3	Sprocket Mount "Ground Drive Pump"	JM0034442
4	14 x 6 Wheel 1 1/8 Inset	JM0019535
5	ST215-75D14 Tire Carlisle Sport Trail	JM0019529
6	Ground Drive Pump Pivot	JM0036063
7	3/8"-16 x 1" Gr5 Z SF Hex Bolt	JM0002092

See wing wheel section of manual for hub components pg. 37

5000 Ground Driven Pump

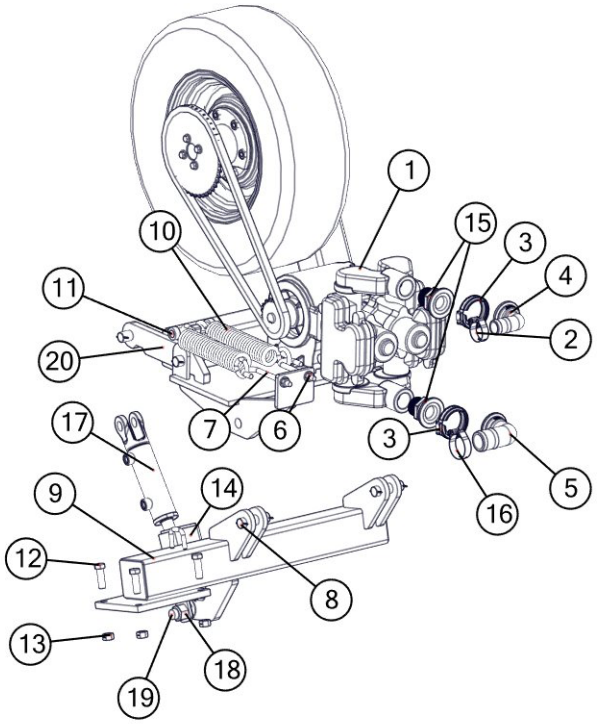

#	Description	Part. No.
1	John Blue NGP-9055 Dual Piston Pump	JM0035142
1	John Blue NGP 7055-F Single Piston Pump	JM0034503
2	T-Bolt Hose Clamp 1-1/2”	JM0021189
3	2" Manifold Gasket(Not Shown)	JM0021145
3	2" Manifold Flange Clamp	JM0035251
4	2" Manifold Flange x 90 deg 1-1/2" Hose Barb	JM0034352
5	2" Manifold x 2" Hose Barb 90 Deg	JM0035141
6	1/2"-13 Gr5 Z Hex Nut	JM0001624
7	1/2”-13 Gr5 Z J-Bolt	JM0002168
8	1 x 3-1/2” Clevis Pin with Cotter Pins	JM0001817
9	Ground Drive Pump Mount	JM0036062
10	Tongue Spring (24T,HT) 3/8 x 1 3/4 x 12 1/2	JM0014200
11	Shaft Collar - Set Screw 3/4”	JM0025216
12	5/8”-11 x 2” Gr5 Z Hex Bolt	JM0002104
13	5/8”-11 Gr5 Z Centerlock Hex Nut	JM0002146
14	Cylinder Lock Latch	JM0036330
15	1 1/2” Male MPT X 2” Manifold Flange(Dual Piston Pump)	JM0035124
16	T-Bolt Hose Clamp 2” Hose	JM0035247
17	Lion 2 bore x 4 stroke WH series	JM0034861
18	1-8 Gr5 Z Nylon Locking Hex Nut	JM0002161
19	1”-8 X 5” Gr5 Z Pn Hex Bolt	JM0001558
20	Linkage Weldment	JM0037580
	John Blue Dual Piston repair kit (Not Shown)	JM0038496

5000 GEP Coulter

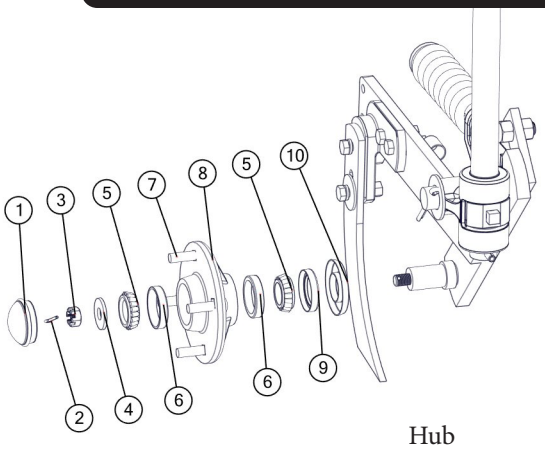

Hub
Assembly

#	Description	Part. No.
1	Dust Cap	JM0038288
2	1/8” Cotter Pin	JM0004177
3	1/2” castle nut	JM0038277
4	Hub Washer	JM0038278
5	Tapered Single - LM67048	JM0019564
6	Cup LM67010	JM0026564
7	1/2”-13 x 2” Gr2 Z Stud	JM0038410
8	Hub	JM0038285
9	Grease Seal	JM0038287
10	Seal Protector	JM0038267

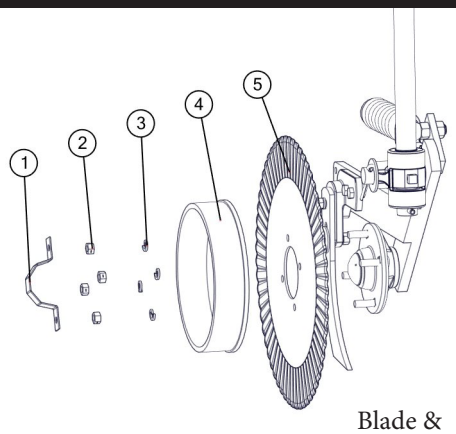

Blade &
Depth Control
Spool Assembly

#	Description	Part. No.
1	Dust Cap Keeper	JM0038391
2	1/2”-13 Gr5 Z Hex Nut	JM0002124
3	1/2” Zinc Finish Lock Washer	JM0019021
4	Depth Control Spool	JM0031281
5	20” Ripple Blades	JM0031269
5	20” Wavy Blade	JM0038506

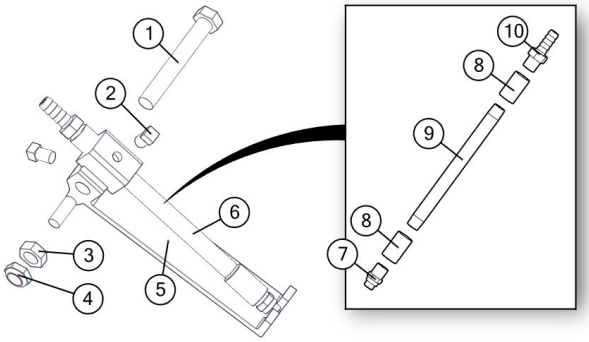

#	Description	Part. No.
1	1/2”-13 x 3-1/2” SS Hex Bolt	JM0041790
2	3/8”-16 x 1/2” Square Head SS Bolt	JM0041793
3	1/2”-13 SS Hex Jam Nut	JM0041791
4	1/2”-13 SS Nylon Locking Hex Jam Nut	JM0041792
5	GC3205 Injection Mount	JM0035055
6	Fertilizer Injector With Fittings	JM0041788
7	#10 NitroGro Injector	JM0036459
7	#15 NitroGro Injector	JM0036460
7	#20 NitroGro Injector	JM0036462
7	#30 NitroGro Injector	JM0036463
7	#40 NitroGro Injector	JM0036464
8	1/4” NPT Merchant Coupling SS	JM0036441
9	1/4” NPT x 6 Pipe Nipple SS	JM0036445
10	Hose Barb 3/8” x 1/4” MPT Stainless Steel	JM0036419
10	Hose Clamp (Not Shown)	JM0039206

5000 GEP Coulter Mount

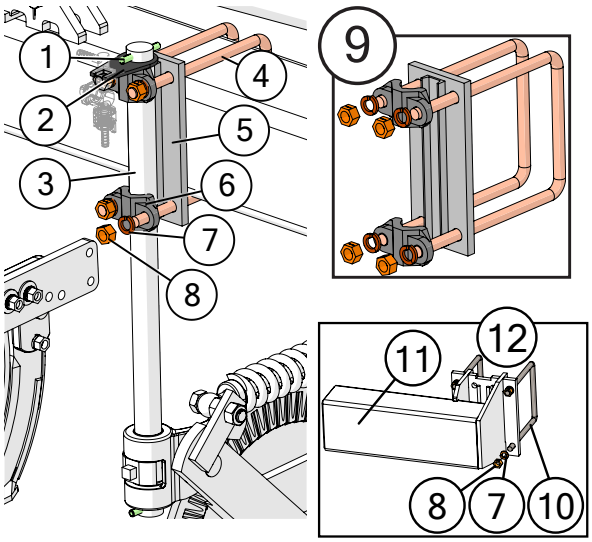

	Description	Part No.
1	3/8" x 3" SS Roll Pin	JM0037162
2	QJ Mounting Tab for 5000 Coulter (NitroGro)	JM0036048
3	28" Shaft for 5000 Coulter (NitroGro)	JM0030959
3	Shaft - ParaLinkage Coulter Mount	JM0058251
4	5/8"-11 x 7-1/8" x 10-1/4" Square U-Bolt	JM0030958
5	Channel Bracket Plate for 5000 Coulter (NitroGro)	JM0030954
6	Channel Bracket Casting (NitroGro 5000)	JM0030956
7	5/8" Gr2 Z Lock Washer	JM0051157
8	5/8"-11 Gr2 Z Hex Nut	JM0001522
9	Coulter Bracket Package for 5000 GEP Coulter	JM0035053
10	5/8"-11 x 7-1/8" x 7" Square U-Bolt	JM0043200
11	Offset Weldment Mount for Coulters	JM0058654
12	Offset Weldment Mount for Coulters with Hardware	JM0058653

5000 GEP Coulter

	Description	Part No.
1	Shaft Nylon Bushing (GEP Coulter)	JM0038258
2	5/8"-11 x 1" Square Head Bolt	JM0037259
3	Lock Collar - 30 Degrees Rotation (Standard)	JM0031280
4	3/8" x 3" SS Roll Pin	JM0037162
5	3/4"-10 x 3" Gr5 Z Hex Bolt	JM0019201
6	Nylon Spring Bushing 3/4" ID x 7/8" OD x 1-5/32"	JM0038264
7	Spring Rod for GEP Coulter	JM0038265
8	Spring for GEP Coulter	JM0038269
9	Spring Alignment Cast Washer for GEP Coulter	JM0038270
10	3/4"-10 Gr2 Z Nylon Locking Hex Nut	JM0026756
11	3/4"-10 Gr2 Z Hex Nut	JM0002125
12	Nylon Bushing with Flange 1-1/4" ID x 3-5/8" (GEP)	JM0038259
13	1-3/8" ID, 2-1/2" OD Washer	JM0038272
14	Cotter Pin 3/16" Diameter x 2" Long	JM0038266
15	GEP Coulter Knuckle, Arm, and Hub Assembly	JM0031265

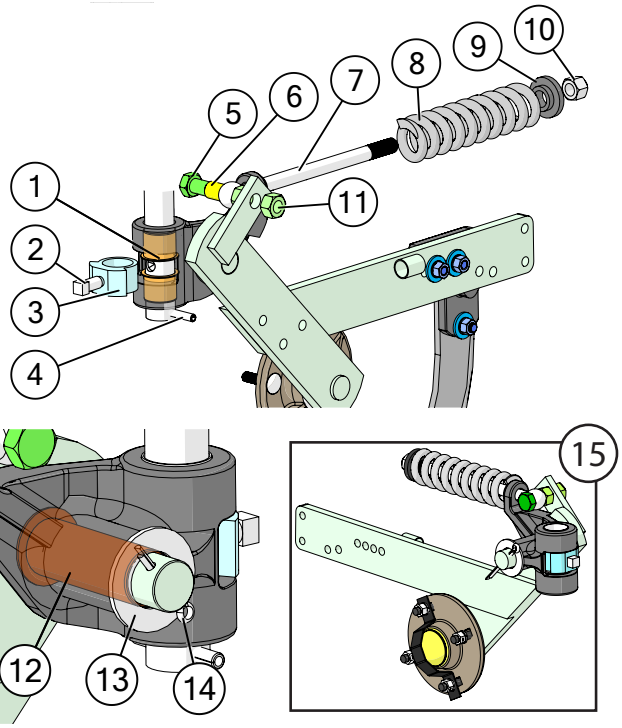

GEP Coulter Knife Assembly

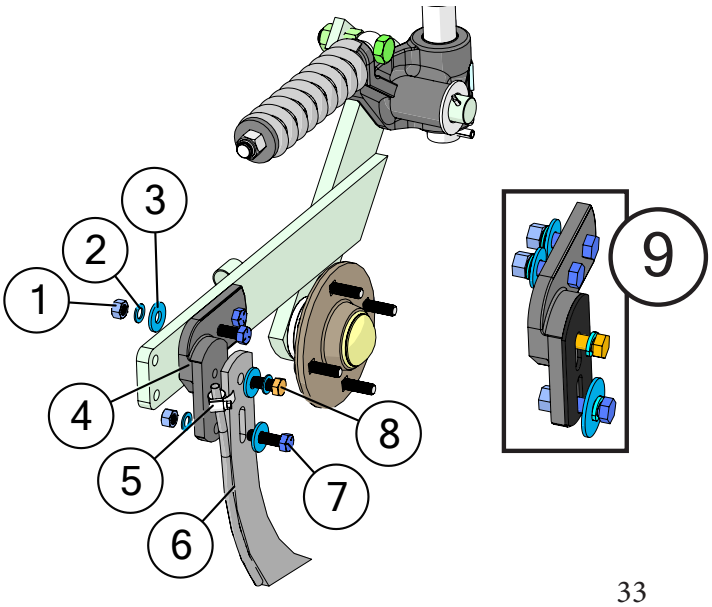

	Description	Part No.
1	1/2"-13 Gr2 Z Hex Nut	JM0002124
2	1/2" Gr2 Z Lock Washer	JM0019021
3	1/2" ID, 1-3/8" OD Z Flat Washer	JM0003082
4	Grove Knife Bracket Weldment	JM0059364
5	3/8" Hose Clamp SS	JM0039206
6	C050 Wiese Knife	JM0031273
7	1/2"-13 x 1-3/4" Gr5 Z Hex Bolt	JM0002101
8	1/2"-13 x 1-1/4" Gr5 Z Hex Bolt	JM0001513
9	Coulter Knife Bracket Package	JM0041705

5000 Hitch

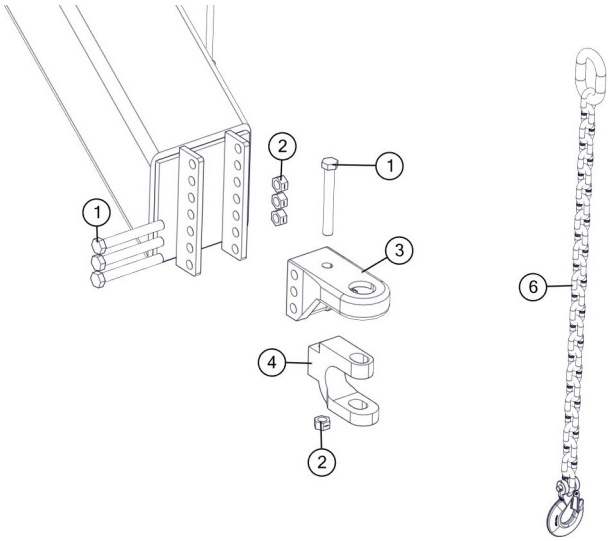

#	Description	Part. No.
1	3/4”-10 x 6” Gr8 Z Hex Bolt	JM0037185
2	3/4”-10 Gr5 Z Centerlock Hex Nut	JM0002147
3	CTD Perfect Hitch Base PP23XLR	JM0037174
4	CTD Perfect Hitch Clevis 1-1/4” x 1-3/4” Slot	JM0037173
5	Hitch Assembly (Items 1 through 4)	JM0037177
6	Safety Chain (SC-525875)	JM0027440

5000 Jack Weldment

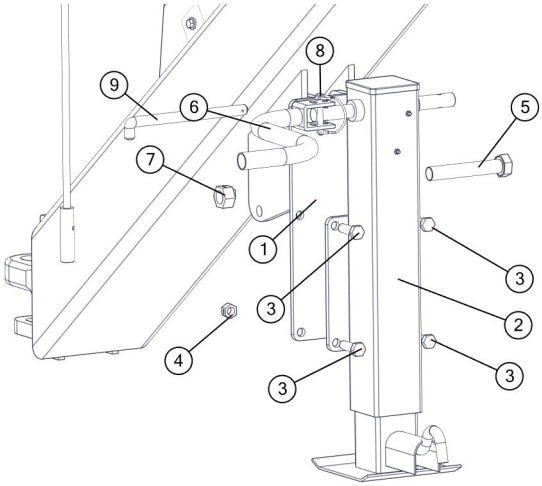

#	Description	Part. No.
1	Jack Mounting Bracket	JM0031545
2	Jack Assembly (NitroGro & 510ST)	JM0030054
3	5/8"-11 x 2" Gr8 Z Hex Bolt	JM0001771
4	5/8"-11 Gr5 Z Centerlock Hex Nut	JM0002146
5	1”-8 x 6” Gr5 Z Hex Bolt	JM0002111
6	Jack Handle	JM0037953
7	1”-8 Gr5 Z Centerlock Hex Nut	JM0002149
8	Lynch Pin 3/8” x 2-1/2”	JM0014929
9	3/4" L Pin	JM0003076

5000 Light Bar

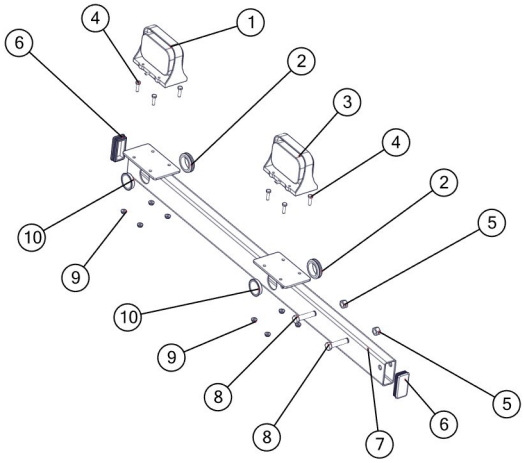

#	Description	Part. No.
1	Amber Light	JM0009975
2	1-1/2” ID x 0.188 GW x 1-3/4” GD Grommet	JM0016924
3	Red Light	JM0009976
4	1/4"-20 x 1" Gr5 Z Hex Bolt	JM0002095
5	1/2"-13 Gr5 Z Centerlock Hex Nut	JM0001511
6	1-1/2” x 3” Rectangular Tubing Plug	JM0037249
7	Light Bar Weldment	JM0036071
8	1/2”-13 x 2-1/4” Gr5 Z Hex Bolt	JM0016677
9	1/4"-20 Gr5 Z SF Hex Nut	JM0001630
10	Plastic Plug for 1-3/4” Hole	JM0037250

Wings

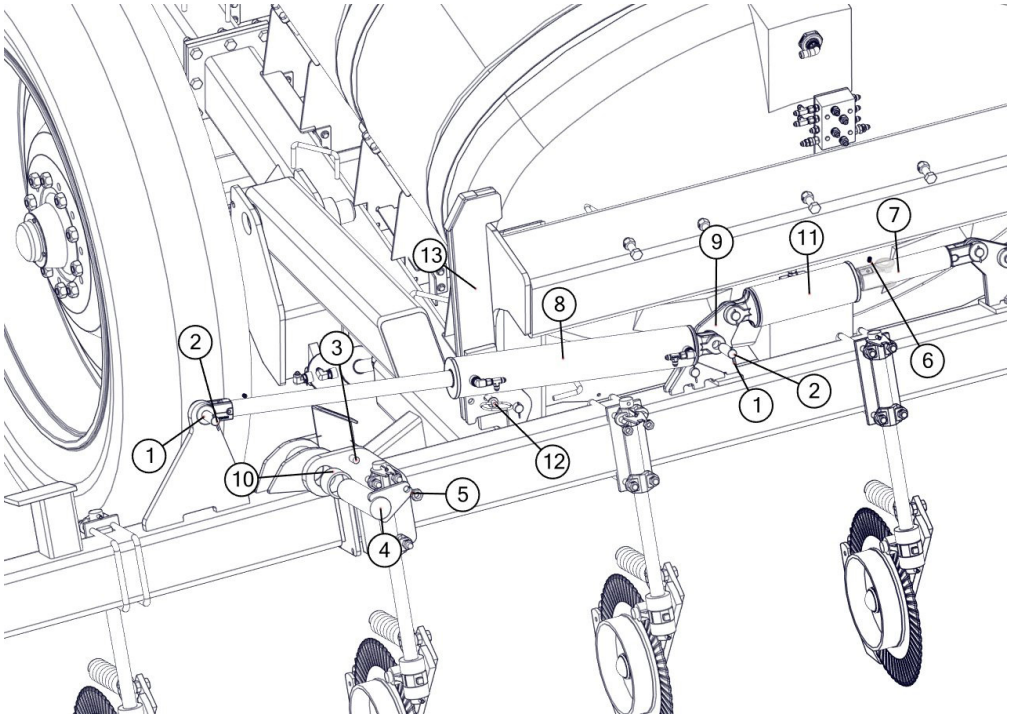

#	Description	Part. No.
1	1” x 3.4 Clevis Pin	JM0001816
2	Cotter Pin	JM0003064
3	3/4”-10 x 3” Gr5 Z Hex Bolt	JM0027464
4	Pivot Pin - 2-1/2” Dia With Bolt Retainer	JM0031502
5	3/4”-10 Gr5 Z Centerlock Hex Nut	JM0002147
6	3/8”-16 x 1/2” Socket Set Screw Nylon Tip	JM0037255
7	Shaft - Down pressure Cylinder	JM0032428
8	Lion 4” Bore x 24” Stroke Welded WH Series	JM0030730
9	Linkage - Down Pressure Cylinder	JM0034014
10	Sleeve Composite Bearing	JM0020546
11	JD 4 Bore x 8 Stroke Welded Cylinder	JM0030757

Wings

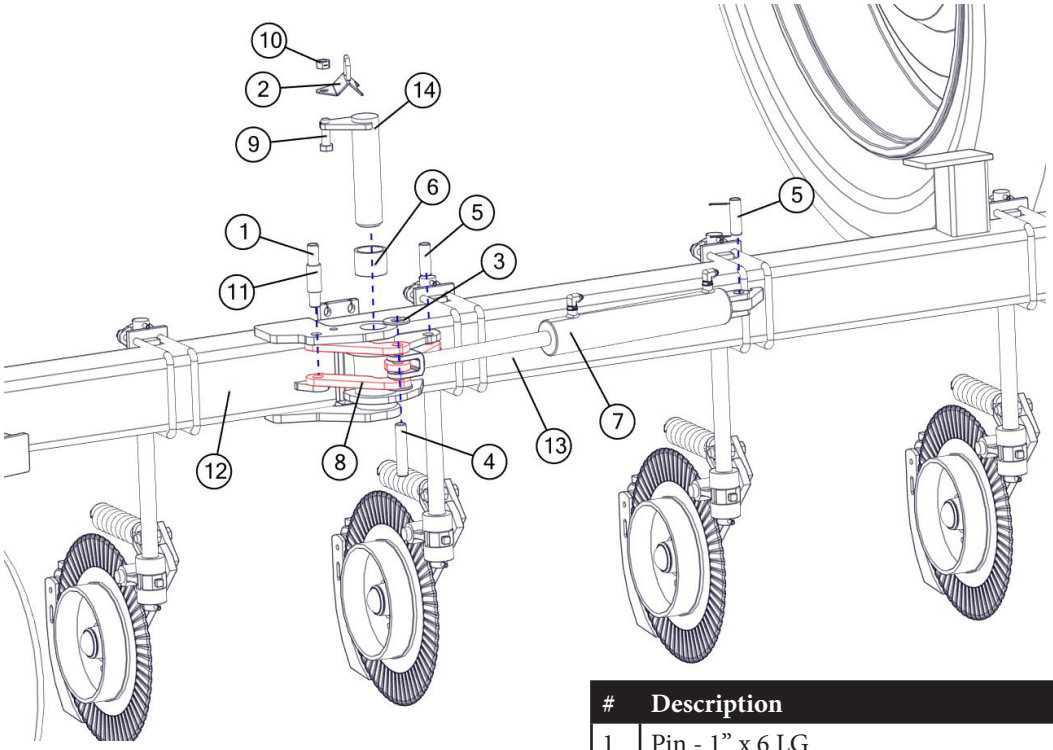

#	Description	Part. No.
1	Pin - 1” x 6 LG	JM0031495
2	Hose Mount	JM0036703
3	1” USS Flat Washer	JM0003063
4	Pin - 1” x 5” LG	JM0031496
5	1” x 3-1/2” Clevis Pin with Cotter Pins	JM0001817
6	Sleeve Composite Bearing	JM0020546
7	3” x 14” Welded Cylinder	JM0035057
8	Linkage - Outside Wing	JM0030333
9	3/4” -10 x 3.0 Gr5 Z Hex Bolt	JM0027464
10	3/4” -10 Gr5 Z Centerlock Hex Nut	JM0002147
11	Spacer - Linkage	JM0031494
12	Outside Wing (Right Side)	JM0034129
12	Outside Wing (Left Side)	JM0034107
13	Mid Wing (Right Side, 2018 - present)	JM0036122
13	Mid Wing (Left Side 2018, - present)	JM0036129
14	Pivot Pin - 2-1/2” Dia With Bolt Retainer	JM0031502

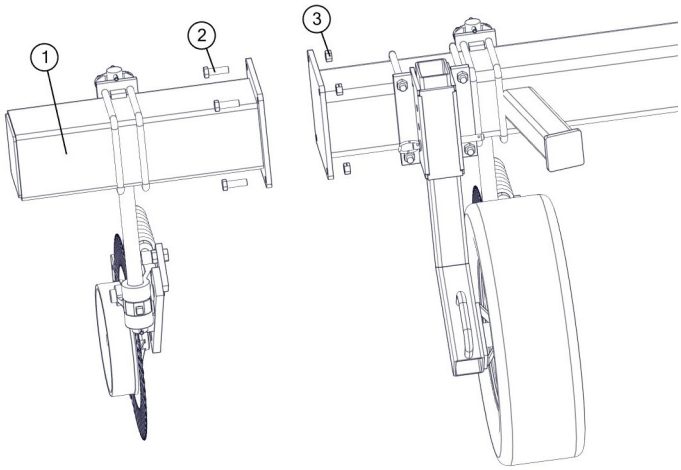

#	Description	Part. No.
1	Mounting Bracket	JM0020472
2	5/8”-11 x 2” Gr8 Z Hex Bolt	JM0001771
3	5/8”-11 Gr5 Z Centerlock Hex Nut	JM0002146

Lock Pin
JM0003076

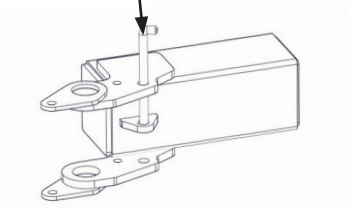

30’ Wing
Extension
JM0035008

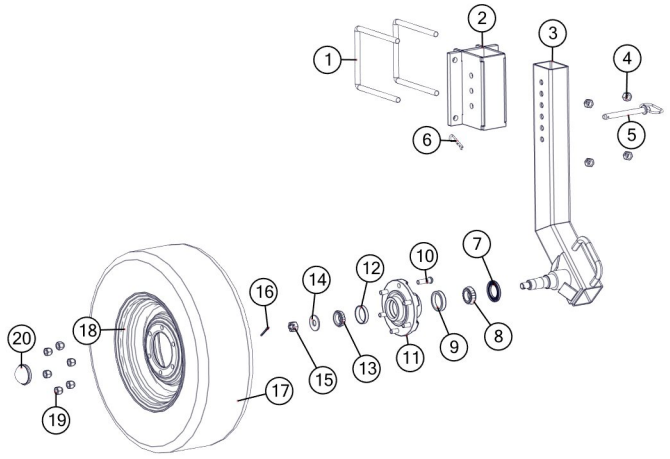

#	Description	Part. No.
1	Square U-Bolt 7-1/8” Inside Width x 9” Length, 5/8”-11	JM0020901
2	Gauge Wheel Mount	JM0031518
3	Gauge Wheel Assembly (Right Hand)	JM0031511
3	Gauge Wheel Assembly (Left Hand)	JM0031520
4	5/8”-11 Gr5 Z Centerlock Hex Nut	JM0002146
5	5/8” x 7” Hitch Pin	JM0003079
6	3/16” x 2-1/2” Hair Clip Pin	JM0001657
7	Grease Seal, 6-8 Ton (103953)	JM0026572
8	Large Inner Bearing for 6-8 Ton (104579)	JM0019563
9	Large Cup for 6-8 Ton (LM48510)	JM0026565
10	Wheel Stud for Hub, 6-8 Ton (1/2”-20 x 1-7/8”)(4187)	JM0019559
11	Hub with Races, Studs and Nuts, 7-8 Ton (105218)	JM0026566
12	Small Cup for 6-10 Ton (200500)	JM0010122
13	Small Outer Cone for 6-10 Ton (LM67048)	JM0019564
14	3/4” Z Flat Washer (2” OD)(34FW)	JM0010006
15	3/4”-10 Gr5 Z Castle Hex Nut	JM0002130
16	3/16” x 1 1/2” Cotter Pin, 6-10 Ton (CP-316)	JM0014348
17	Tire ST215-75D14	JM0019529
18	Wheel Rim, 6 hole 14” x 6”	JM0019535
19	1/2”-20 Lug Nut, 6-8 Ton (5552)	JM0003062
20	Dust Cap, 6-10 Ton (103969)	JM0026567

Spindle

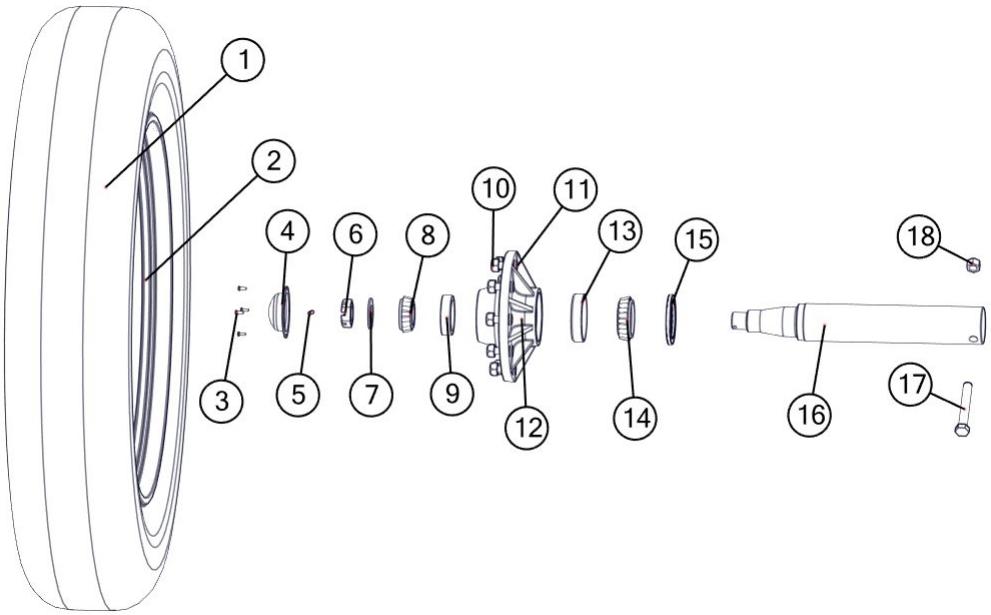

#	Description	Part. No.
1	480/80R42 Tire Firestone	JM0020038
1	380/90R46 Tire Firestone	JM0016170
2	Wheel, 46 x 12 10 Holes	JM0029935
2	Wheel, 42 x 16 10 Holes	JM0020015
3	1/4”-20 x 3/4” Gr5 Z Hex Bolt	JM0001507
4	Dust Cap (909921)	JM0018954
5	3/8” x 2-3/4” Z Roll Pin (905945)	JM0018956
6	2”-12 Gr5 Z Slotted Spindle Nut (912973)	JM0015899
7	2-1/8” ID x 3-3/4” OD Flat Washer - 3/16” Thick	JM0015900
8	Tapered Single Bearing (910347) (HM212049)	JM0018852
9	Small Race (HM212011) (910384)	JM0018854
10	3/4 -16 Lugnut (913571)	JM0018958
11	3/4 -16 x 1-3/4” Stud	JM0018957
12	Hub with Races, Lugs, Studs, and Nuts (W-881)	JM0020510
13	Large Race (HM218210)	JM0018848
14	Tapered Single Bearing (HM218248)	JM0018849
15	Grease Seal (CR-43771)	JM0018955
16	4-1/2” Spindle ((281900))	JM0018794
17	1”-8 x 7” Gr5 Z Hex Bolt	JM0016689
18	1-8 Gr5 Z Nylon Locking Hex Nut	JM0002161

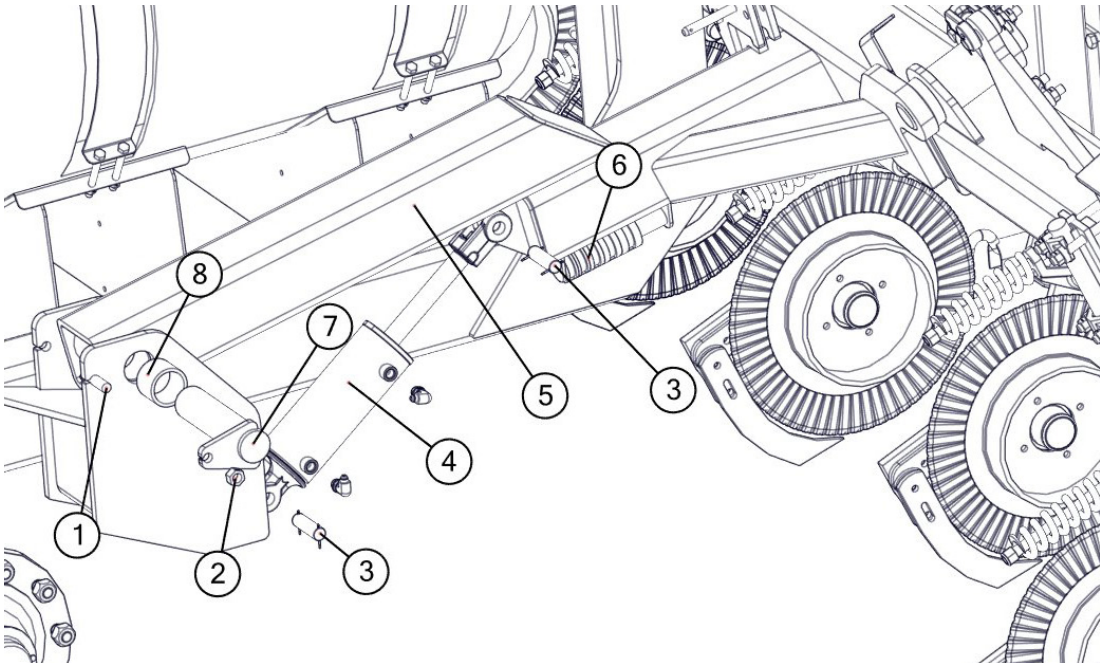

#	Description	Part. No.
1	3/4”-10 x 3” Gr5 Z Hex Bolt	JM0027464
2	3/4”-10 Gr5 Z Centerlock Hex Nut	JM0002147
3	1” x 3-1/2” Clevis Pin with Cotter Pins	JM0001817
4	4” Bore x 8” Stroke Welded Cylinder	JM0030757
5	Toolbar Base Section (2016, 2017)	JM0034136
5	Toolbar Base Section (After 2017)	JM0039525
6	1-1/2” Dia Cylinder Spacer, Kit	JM0037182
7	Pivot Pin - 2-1/2 Dia With Bolt Retainer	JM0031502
8	Sleeve Composite Bearing	JM0020546

Frame

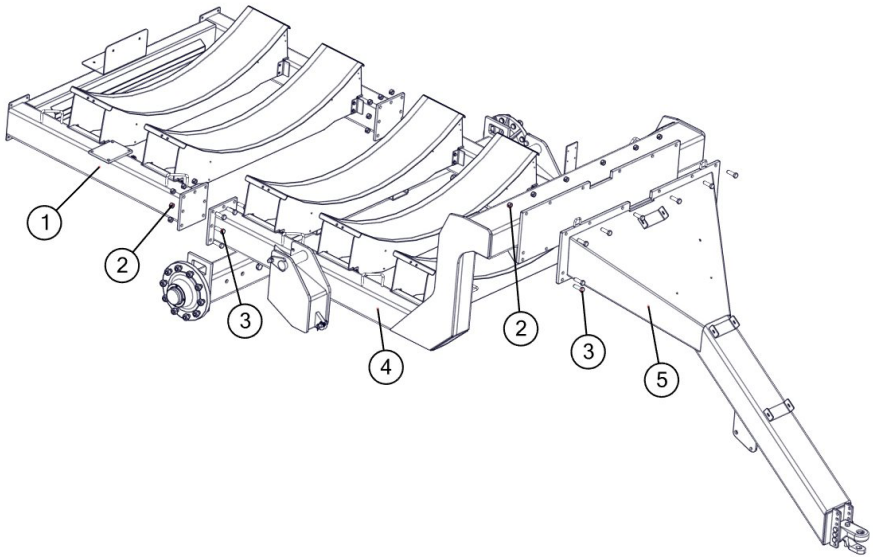

#	Frame 2016 & 2017	Part. No.
1	Rear Frame 5016	JM0033742
1	Rear Frame 5010	JM0033744
2	3/4”-10 Gr5 Z Centerlock Hex Nut	JM0002147
3	3/4”-10 x 3” Gr5 Z Hex Bolt	JM0027464
4	Base Frame 5016	JM0033657
4	Base Frame 5010	JM0034176
5	Tongue	JM0033656

#	Frame After 2017	Part. No.
1	Rear Frame 5016	JM0039435
1	Rear Frame 5010	JM0033744
2	3/4”-10 Gr5 Z Centerlock Hex Nut	JM0002147
3	3/4”-10 x 3” Gr5 Z Hex Bolt	JM0027464
4	Base Frame (All)	JM0036468
5	Tongue	JM0033656

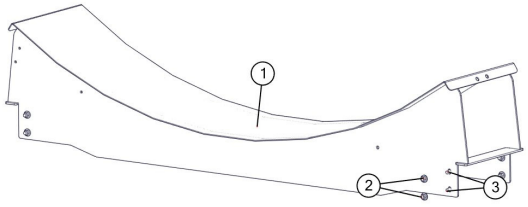

#	Description (Tank Saddle)	Part. No.
1	Saddle - Tank (After 2017)	JM0036718
2	3/8 -16 Gr5 Z SF Hex Nut	JM0002152
3	3/8”-16 x 1” Gr5 Z SF Hex Bolt	JM0002092

Wire Harness

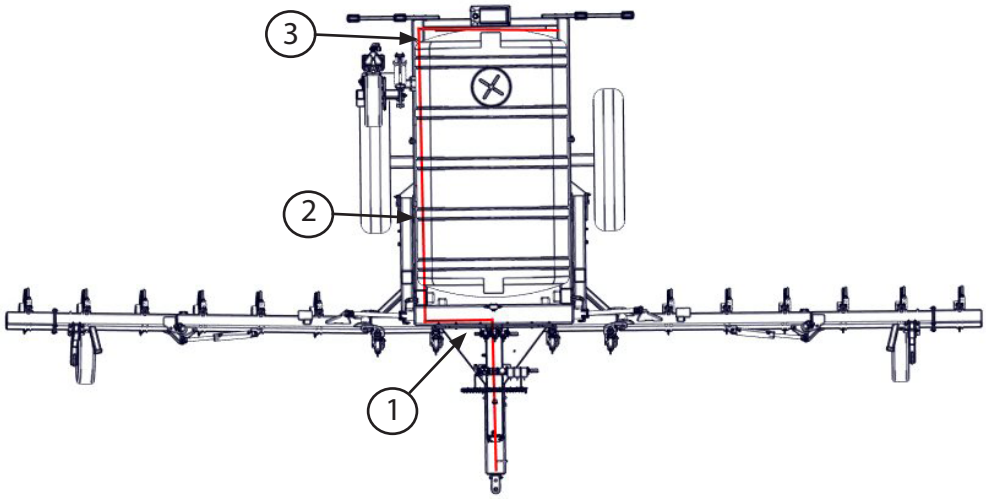

#	Light Harness	Part. No.
1	Main Wiring Harness with 7 Prong Connector	JM0027077
2	Soil Conditioner Light Wiring Harness	JM0027080
3	Light Enhancer and Adapter Kit (3 wires)	JM0010566

SCS 450 Liquid Control System

	Description	Part No.
1	Raven SCS450 Control Console	JM0039335
2	Raven Console Cable (10') SCS 440/450	JM0039337
3	Remote Switch Cable for Implement Engagement - Raven 450 Control	JM0050676
4	Mini Wisker Limit Switch	JM0050161
5	Phoenix GPS Speed Sensor	JM0039338
6	Raven Flow Cable - 6 Boom (12') - 3 Pin Weather Pack	JM0039336
7	PWM Extension Cable (12')	JM0050675
8	ACE 750 PWM Pump	JM0050925
9	Raven Control Valve M200 Manifold Flange (1-1/2")	JM0038726
10	Raven 5 Section Manifold	JM0038797
11	Raven Flow Meter M220 Manifold Flange (RFM100P)	JM0038727

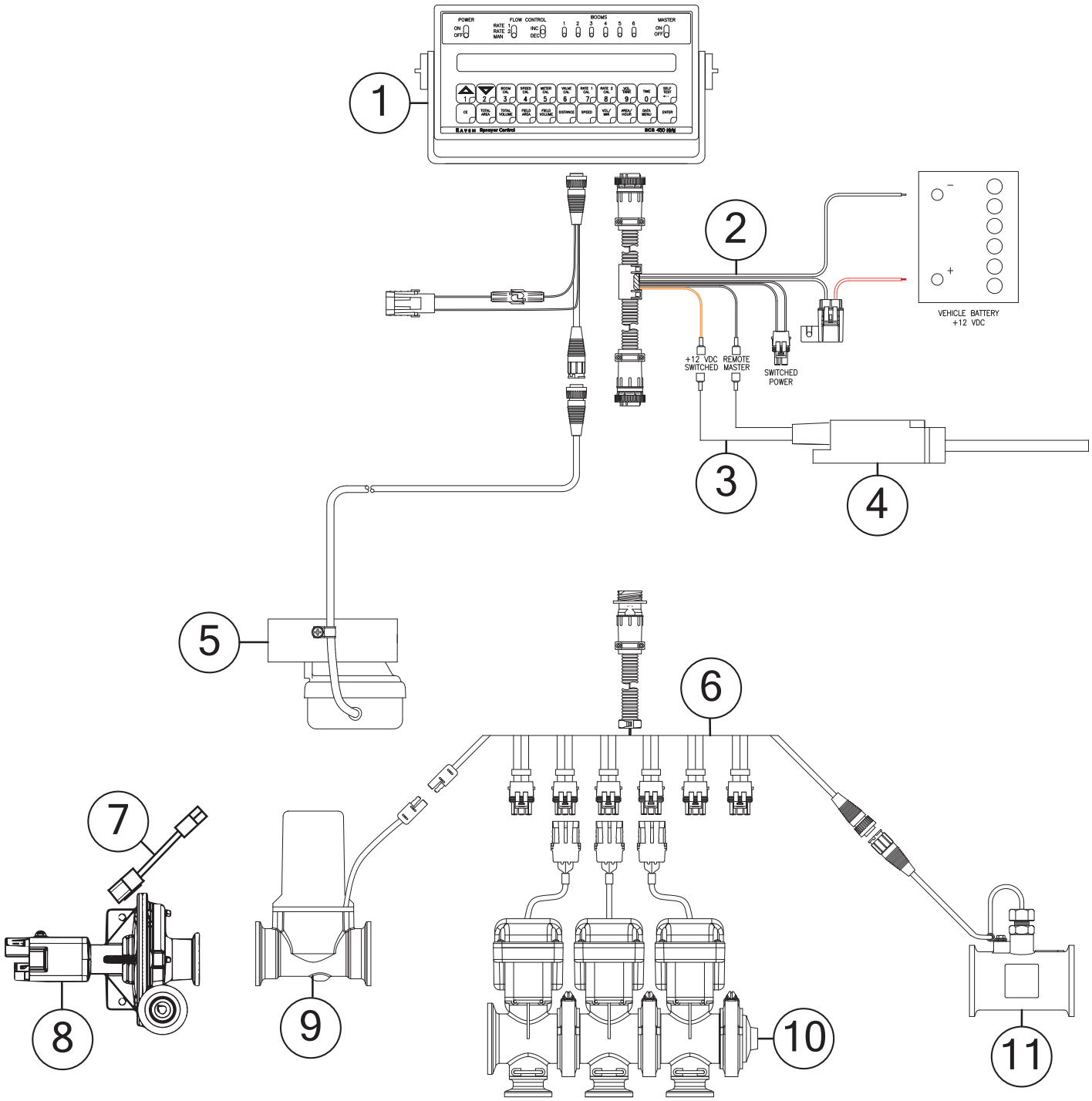

ISO Liquid Control System

	Description	Part No.
1	Raven Cable ISOBUS Hitch to Raven ECU (12')	JM0039341
1	Raven Cable ISOBUS Hitch to Raven ECU (17')	JM0051018
2	Remote Switch Cable for Implement Engagement - ISO Control	JM0050677
3	Mini Wisker Limit Switch	JM0050161
4	Raven ISO Single Product Kit	JM0039339
5	Raven Flow Cable - 6 Boom (12') - 3 Pin Weather Pack	JM0039336
6	PWM Extension Cable (12')	JM0050675
7	ACE 750 PWM Pump	JM0050925
8	Raven Control Valve M200 Manifold Flange (1-1/2")	JM0038726
9	Raven 5 Section Manifold	JM0038797
10	Raven Flow Meter M220 Manifold Flange (RFM100P)	JM0038727

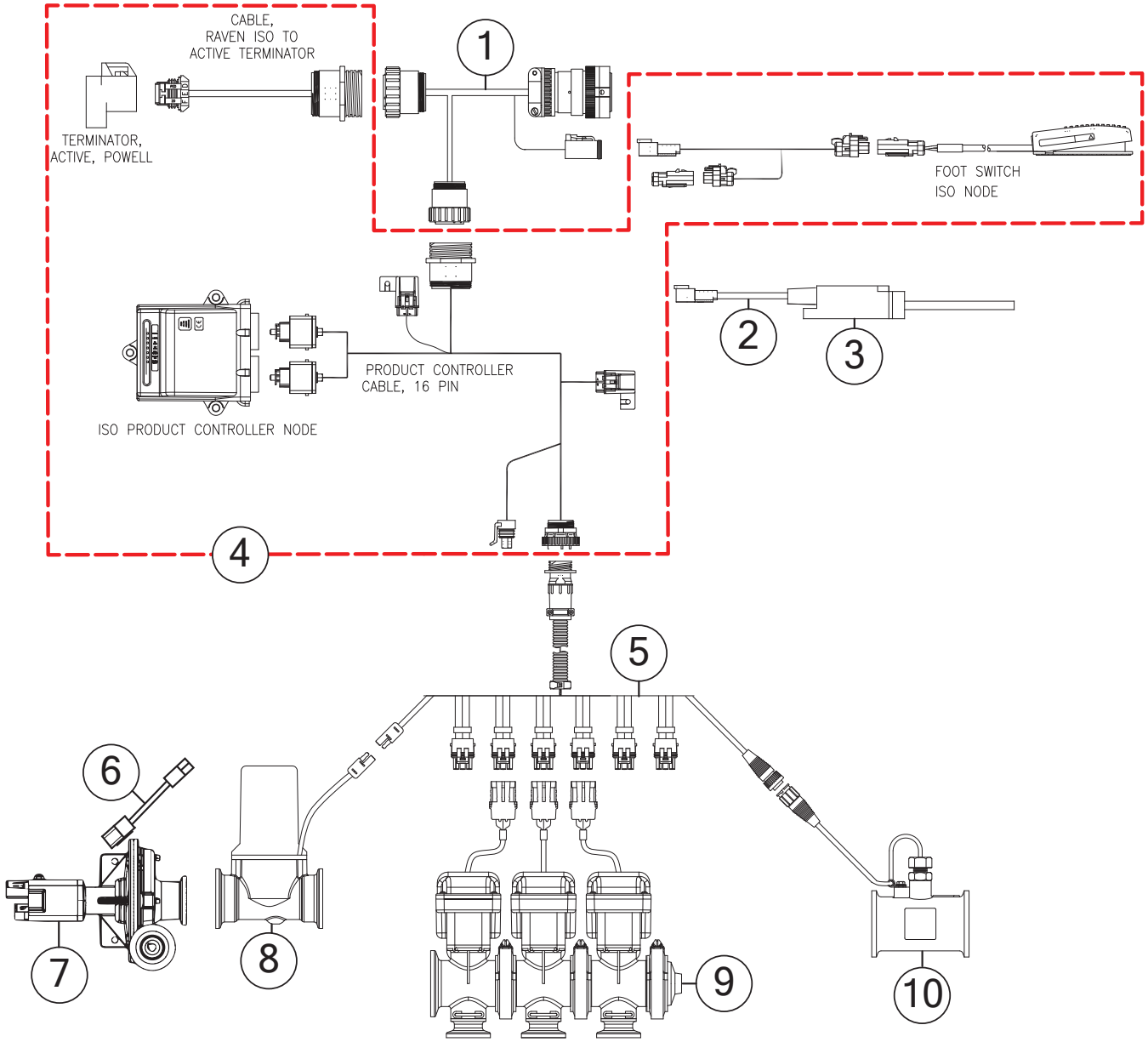

Fertilizer Hose Routing - Ground Drive Pump without Flow Monitors

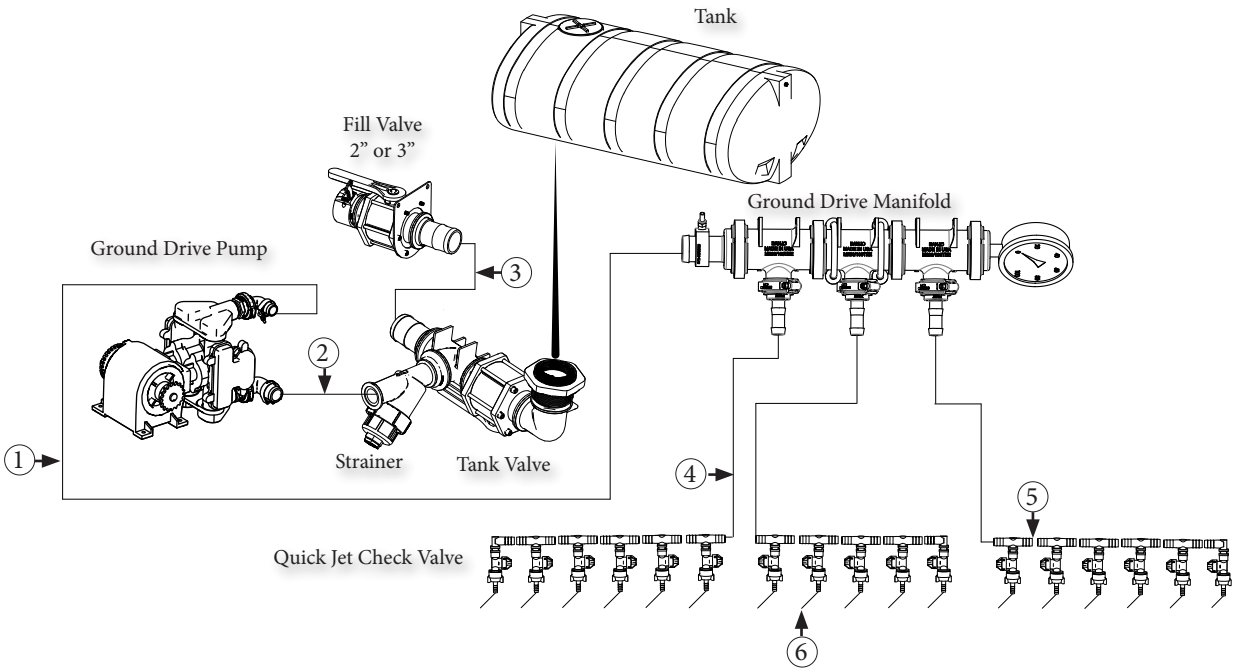

#	Description	Part. No.
1	19' x 1-1/2" Hose from Pump to Manifold (1600 Gal.)	JM0040211
1	15' x 1-1/2" Hose from Pump to Manifold (1000 Gal.)	JM0040330
2	48" x 2" Hose from Ground Drive Pump to Strainer	JM0040214
3	36" x 2" Hose from Fill Valve to Tee	JM0040215
3	38" x 3" Hose from Fill Valve to Tee	JM0040216
4	210" x 3/4" Hose from Manifold to Quick Jet Check Valve	JM0040217
5	30" x 3/4" Hose Quick Jet Check Valve to next Quick Jet Check Valve	JM0040218
6	52" x 3/8" Hose from Quick Jet Check Valve to Coulter	JM0040219

Fertilizer Hose Routing - Ground Drive Pump with Flow Monitors

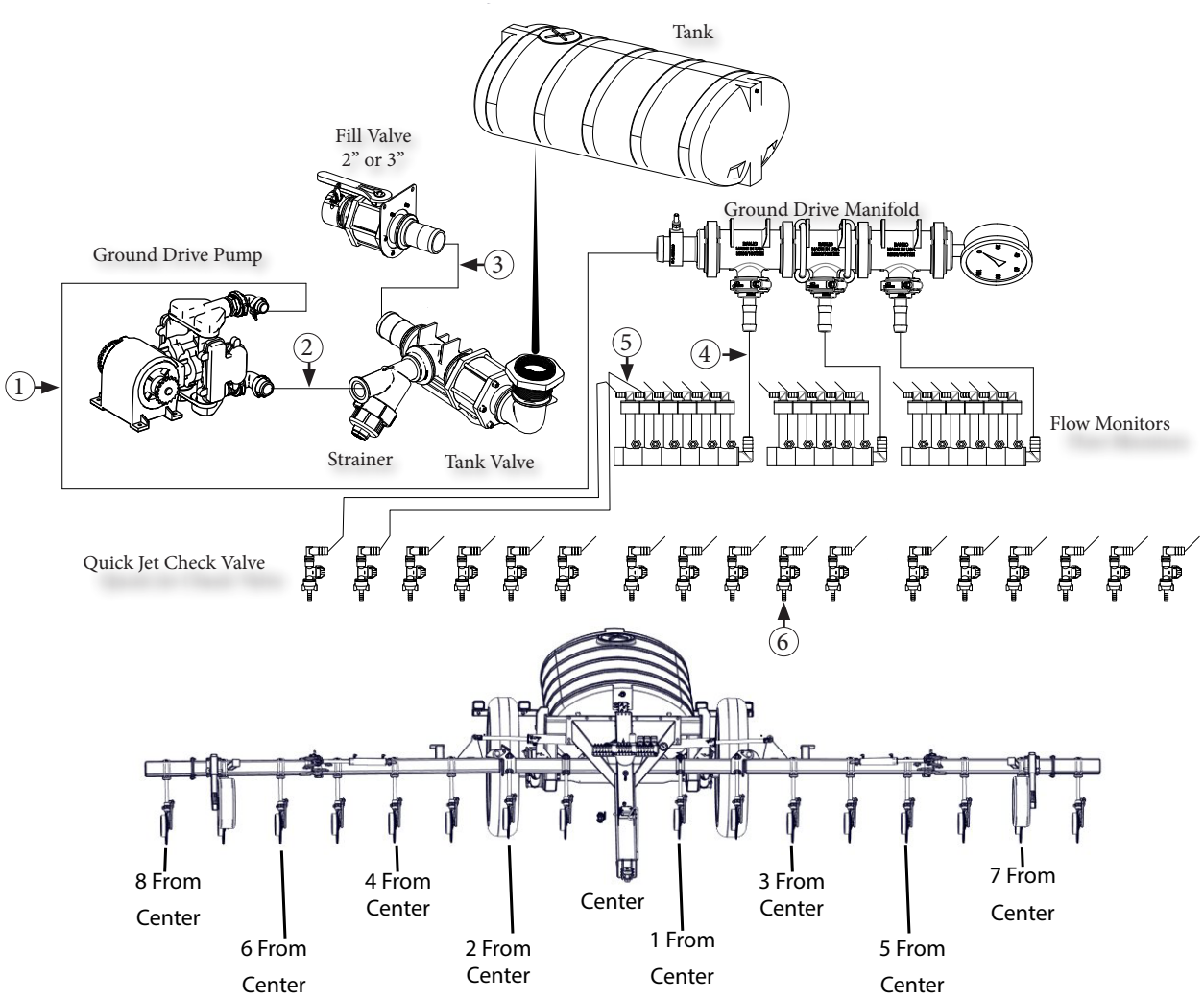

#	Description	Part. No.
1	19' x 1-1/2" Hose from Pump to Manifold (1600 Gal.)	JM0040211
1	15' x 1-1/2" Hose from Pump to Manifold (1000 Gal.)	JM0040330
2	48" x 2" Hose from Ground Drive Pump to Strainer	JM0040214
3	36" x 2" Hose from Fill Valve to Tee	JM0040215
3	38" x 3" Hose from Fill Valve to Tee	JM0040216
4	30" x 3/4" Hose from Manifold to Flow Monitors	JM0040217
5	Center Coulter 3/8" Hose 112" Lg	JM0041658
5	1 From Center Coulter 3/8" Fertilizer Hose 142" Lg	JM0041659
5	2 From Center Coulter 3/8" Fertilizer Hose 172" Lg	JM0041660
5	3 From Center Coulter 3/8" Fertilizer Hose 145" Lg	JM0041661
5	4 From Center Coulter 3/8" Fertilizer Hose 175" Lg	JM0041662
5	5 From Center Coulter 3/8" Fertilizer Hose 205" Lg	JM0041663
5	6 From Center Coulter 3/8" Fertilizer Hose 245" Lg	JM0041664
5	7 From Center Coulter 3/8" Fertilizer Hose 275" Lg	JM0041665
5	8 From Center Coulter 3/8" Fertilizer Hose 305" Lg	JM0041666
6	52" x 3/8" Hose from Quick Jet Check Valve to Coulter	JM0040219

Fertilizer Hose Routing - Hydraulic Pump without Flow Monitors

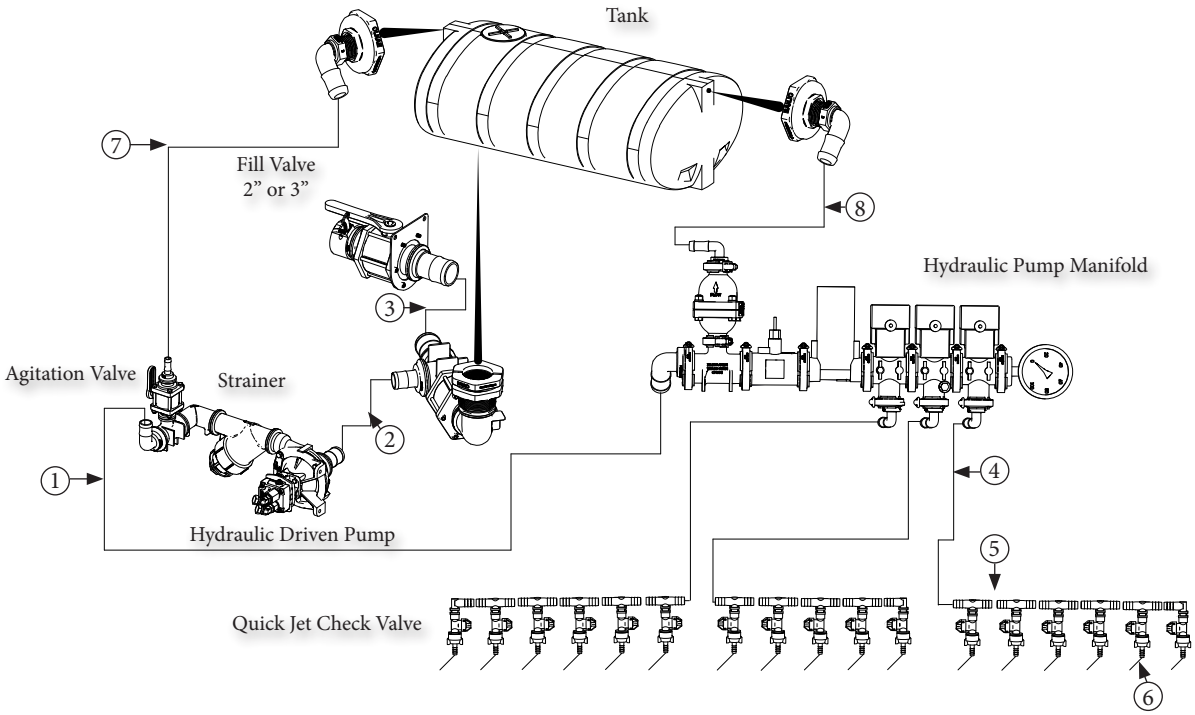

#	Description	Part. No.
1	1-1/2" x 228"; Hose from Hydraulic Pump to Manifold (1600 Gal.)	JM0040211
1	1-1/2" x 180"; Hose from Hydraulic Pump to Manifold (1000 Gal.)	JM0040330
2	2" x 32"; Hose from Tank to Pump	JM0040224
3	2" x 36" Hose from Fill Valve to Tee	JM0040215
3	3" x 38" Hose From Fill Valve to Tee	JM0040216
4	3/4" x 210" Fertilizer Hose from Manifold to Quick Jet Check Valve	JM0040217
5	3/4" x 30" From Quick Jet Check Valve to next Quick Jet Check Valve Hose	JM0040218
6	3/8" x 52" Hose From Quick Jet Check Valve to Coulter	JM0040219
7	3/4" x 55" Agitation Valve to Tank Fertilizer Hose	JM0040332
8	3/4" x 55" Spike Valve to Tank Fertilizer Hose	JM0040332

Fertilizer Hose Routing - Hydraulic Pump with Flow Monitors

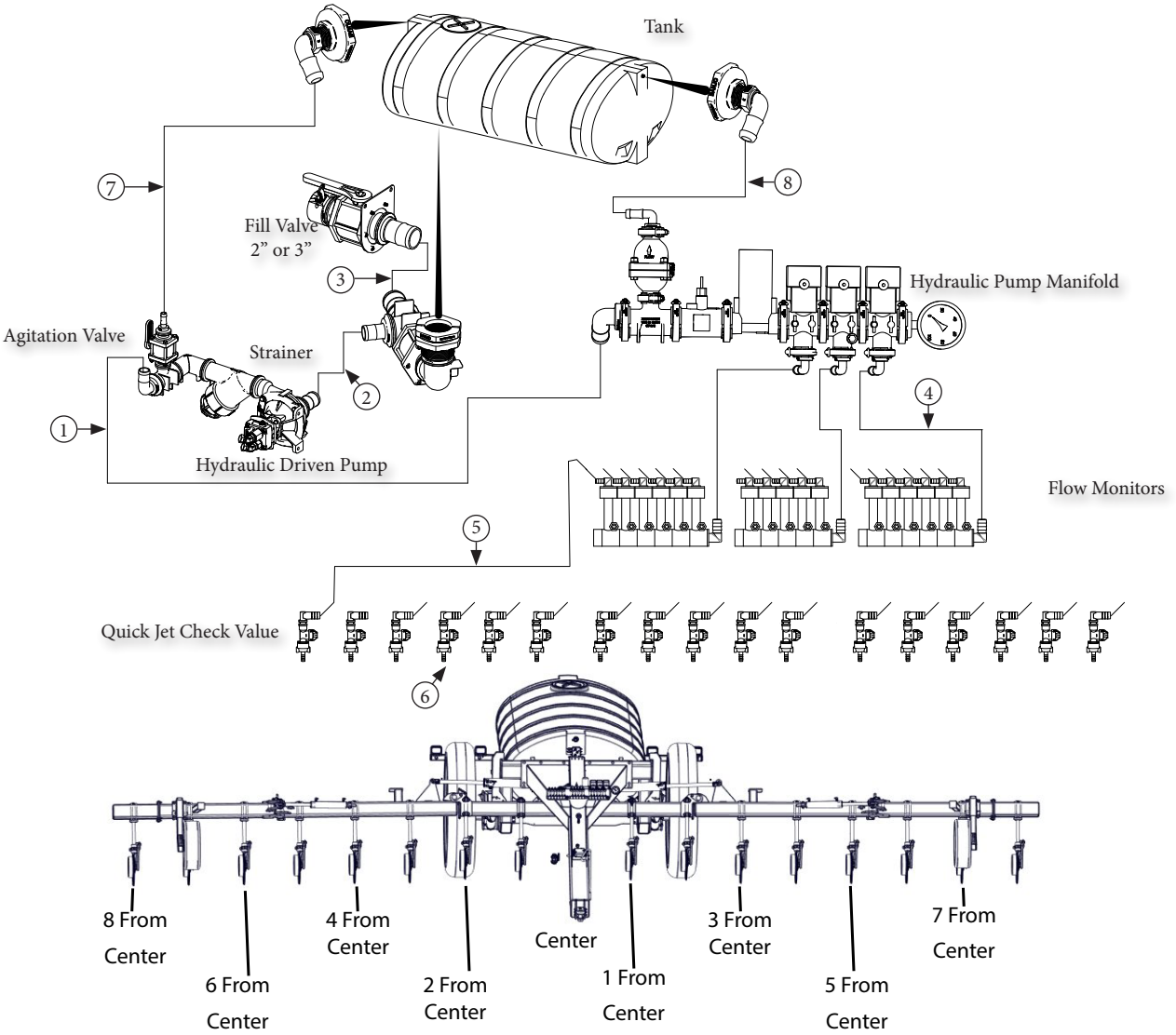

#	Description	Part. No.
1	1-1/2" x 228"; Hose from Pump to Manifold (1600 Gal.)	JM0040211
1	1-1/2" x 180"; Hose from Pump to Manifold (1000 Gal.)	JM0040330
2	2" x 32"; Hose from Tank to Pump	JM0040224
3	36" x 2" Hose from Fill Valve to Tee	JM0040215
3	38" x 3" Hose from Fill Valve to Tee	JM0040216
4	3/4" x 30"; Hose from Manifold to Flow Monitors	JM0040218
5	Center Coulter 3/8" hose 112" Lg	JM0041658
5	1 From Center Coulter 3/8" Fertilizer Hose 142" Lg	JM0041659
5	2 From Center Coulter 3/8" Fertilizer Hose 172" Lg	JM0041660
5	3 From Center Coulter 3/8" Fertilizer Hose 145" Lg	JM0041661
5	4 From Center Coulter 3/8" Fertilizer Hose 175" Lg	JM0041662
5	5 From Center Coulter 3/8" Fertilizer Hose 205" Lg	JM0041663
5	6 From Center Coulter 3/8" Fertilizer Hose 245" Lg	JM0041664
5	7 From Center Coulter 3/8" Fertilizer Hose 275" Lg	JM0041665
5	8 From Center Coulter 3/8" Fertilizer Hose 305" Lg	JM0041666
6	3/8" x 52"; Hose from Quick Jet Check Valve to Coulter	JM0040219
7	3/4" x 55"; Agitation valve to Tank	JM0040332
8	3/4" x 55"; Spike Valve to Tank	JM0040332

Hydraulics Schematic

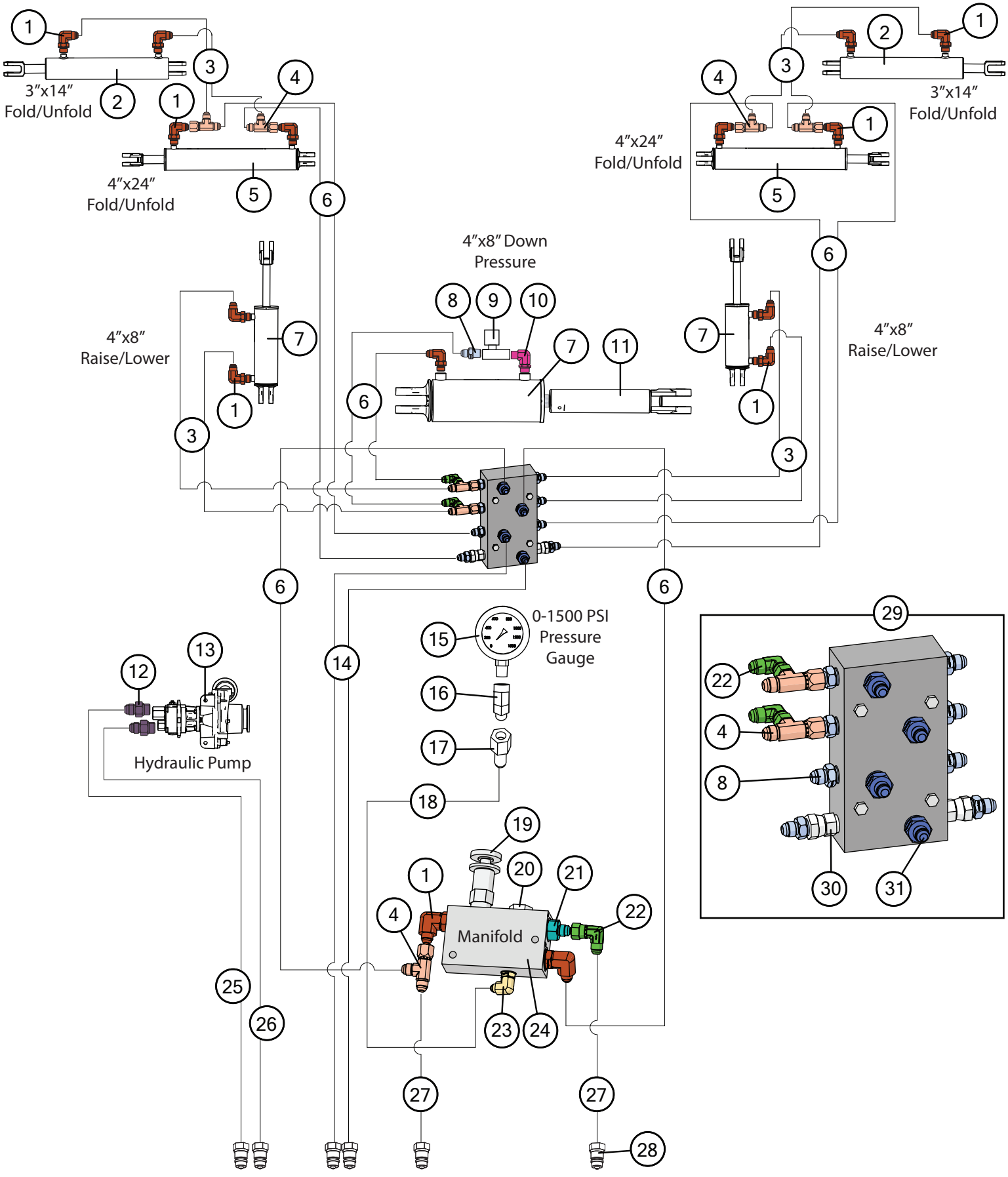

Hydraulics Schematic

#	Description	Part. No.
1	3/8" Male JIC x 1/2" Male ORB; 90 Degree Elbow	JM0037159
2	3" x 14" Welded Non-Cushion JD Cylinder	JM0035057
2	Seal Kit for 3" x 14" Hydraulic Cylinder (30014-138) (JD-607)	JM0039240
3	3/8" x 104" Hydraulic Hose 104inch6M3K-6G-6FJX-6G-6FJX	JM0041615
4	3/8" Male JIC x 3/8" Female JIC Swivel x 3/8" Male JIC Tee	JM0037163
5	4" Bore, 24" Stroke Welded Hydraulic Cylinder	JM0030730
5	Seal Kit for 4" x 24" Hydraulic Cylinder (JD-609)	JM0039242
6	3/8" x 80" Hydraulic Hose 80inch6M3K-6G-6FJX-6G-6FJX	JM0041613
7	4" Bore, 8" Stroke Welded Hydraulic Cylinder	JM0030757
7	Seal Kit for 4" x 8" Hydraulic Cylinder (JD-608)	JM0039241
8	3/8"Male JIC x 3/8" Male NPT; Straight	JM0037167
9	Parker Flow Control Valve (NitroGro)	JM0041626
10	1/2" Male O-Ring x 3/8" Male NPT; 90 Degree Elbow	JM0041630
11	Shaft for Down Pressure Cylinder (NitroGro)	JM0032428
12	1/2" Male JIC x 5/8" Male O-ring; Straight	JM0010294
13	Pump - Centrifugal (9303C-HM1C-U Hypro) (NitroGro)	JM0033798
14	3/8" x 160" Hydraulic Hose 160inch6M3K-6G-8MPX-6G-6FJK	JM0041612
15	Pressure Gauge 0-1500psi, 2" Face, 1/4" NPT Bottom Mount Donaldson	JM0037152
16	1/ 4" Male NPT x 1/4" Female NPT Rigid; 45 Degree Elbow	JM0037156
17	1/4" Female NPT x 3/8" Male JIC Compression Bulk Head Fitting	JM0037155
18	3/8" x 32" Hydraulic Hose 32inch6M3k-6G-6FJX-6G-6FJX	JM0041687
19	Hydraforce Pressure Reducing/Relieving Valve	JM0034800
20	Hydraforce Check Valve 5psi Bias Spring	JM0034805
21	3/8" Male JIC x 1/2" Male ORB; Straight	JM0010302
22	3/8" Male JIC x 3/8" Female JIC Swivel; 90 Degree Elbow	JM0010295
23	3/8" Male JIC x 3/8" Male ORB; 90 Degree Elbow	JM0026121
24	Manifold with 1/2" ORB Ports for PRV and CV (SFP26157)	JM0034773
25	3/8" x 336" Hydraulic Hose 336inch6M3k-6G- 8MP-6G-8FJX	JM0054711
25	3/8" x 300" Hydraulic Hose 300inch6M3k-6G-8MP-6G-8FJX	JM0054709
26	1/2" x 336" Hydraulic Hose 336inch8M3k-8G-8MP-8G-8FJX	JM0054712
26	1/2" x 300" Hydraulic Hose 300inch8M3k-8G-8MP-8G-8FJX	JM0054710
27	3/8" x 80" Hydraulic Hose 80inch6M3k-6G-8MP-6G-6FJX	JM0054708
28	1/2" Female NPT Pioneer (PQC-1)	JM0018254
29	Main Manifold Block (NitroGro)	JM0028902
30	3/8" Male NPT x 1/2" Female NPT Swivel; Straight; with 0.062 Orifice	JM0018231
31	3/8" Male JIC x 1/2" Male NPT; Straight	JM0037172

Injectors - 20" Row Spacing

	20 Gallons Per Acre									25 Gallons Per Acre								
Speed (MPH)	4	5	6	7	8	9	10	11	12	4	5	6	7	8	9	10	11	12
#10 Injector (psi)		1	7	10	15	19	24	29	33	2	6	13	18	24	29	36	41	47
#15 Injector (psi)					3	6	9	12	16			2	5	9	13	17	20	25
#20 Injector (psi)							2	4	7					2	4	8	10	13
#30 Injector (psi)																		2
#40 Injector (psi)																		
GPM (per nozzle)	0.34	0.43	0.52	0.60	0.69	0.77	0.86	0.95	1.03	0.43	0.54	0.64	0.75	0.86	0.97	1.07	1.18	1.29
Flow Indicator 1/2" SS Level	0.6	0.9	1.2	1.5	1.8	2.1	2.4	2.7	3.0	0.9	1.3	1.7	2.0	2.4	2.8	3.1	3.5	3.9
Flow Indicator 7/16" SS Ball						0.1	0.3	0.5	0.7					0.3	0.6	0.9	1.1	1.4

	30 Gallons Per Acre									35 Gallons Per Acre								
Speed (MPH)	4	5	6	7	8	9	10	11	12	4	5	6	7	8	9	10	11	12
#10 Injector (psi)	6	12	20	26	33	39	47	53	61	11	17	27	33	42	49	58	66	74
#15 Injector (psi)		1	6.3	10	15	19	24	29	34	1	5	11	15	21	26	32	37	43
#20 Injector (psi)				2	6	9	13	16	20			3	6	11	14	19	22	27
#30 Injector (psi)							1	4	6					1	3	5	8	11
#40 Injector (psi)																	1	3
GPM (per nozzle)	0.52	0.64	0.77	0.90	1.03	1.16	1.29	1.42	1.55	0.60	0.75	0.90	1.05	1.20	1.35	1.50	1.66	1.81
Flow Indicator 1/2" SS Level	1.2	1.7	2.1	2.5	3.0	3.4	3.9	4.3	4.7	1.5	2.0	2.5	3.0	3.6	4.1	4.6	5.1	5.6
Flow Indicator 7/16" SS Ball			0.1	0.4	0.7	1.1	1.4	1.8	2.1			0.4	0.8	1.2	1.6	2.0	2.4	2.8

	40 Gallons Per Acre									45 Gallons Per Acre								
Speed (MPH)	4	5	6	7	8	9	10	11	12	4	5	6	7	8	9	10	11	12
#10 Injector (psi)	15	23	33	41	50	59	70	78	88	20	28	40	48	59	69	81	90	102
#15 Injector (psi)	4	8	15	20	28	33	39	45	52	7	12	20	26	34	40	47	53	61
#20 Injector (psi)		1	6	10	15	19	25	29	33		3	10	14	20	24	30	35	40
#30 Injector (psi)					4	6	9	12	15				2	7	9	13	16	20
#40 Injector (psi)							2	4	6						2	4	7	10
GPM (per nozzle)	0.69	0.86	1.03	1.20	1.38	1.55	1.72	1.89	2.06	0.77	0.97	1.16	1.35	1.55	1.74	1.93	2.13	2.32
Flow Indicator 1/2" SS Level	1.8	2.4	3.0	3.6	4.1	4.7	5.3	5.9	6.5	2.1	2.8	3.4	4.1	4.7	5.4	6.1	6.7	
Flow Indicator 7/16" SS Ball		0.3	0.7	1.2	1.6	2.1	2.5	3.0	3.4	0.1	0.6	1.1	1.6	2.1	2.6	3.1	3.6	4.1

NOTES:

- The values highlighted in green indicate pressures that are in the optimal pressure range of 20 - 50 psi. The row spacing is 20 inches.
- Density or viscosity of the liquid can effect operating range.
- A displayed pressure higher than the calculated pressure may be due to a pressure drop in the fertilizer hoses.
- With #10 on the center, use #15 for one and a half rate outside, (11 or 15 knife).
- With #15 on the center, use #8 for half rate outside, (13 or 17 knife), and #20 for one and a half rate outside, (11 or 15 knife).
- With #20 on the center, use #10 for half rate outside, (13 or 17 knife), and #30 for one and a half rate outside, (11 or 15 knife).
- With #30 on the center, use #15 for half rate outside, (13 or 17 knife).
- With #40 on the center, use #20 for half rate outside, (13 or 17 knife), and #60 for one and a half rate outside, (11 or 15 knife).

Injectors - 20" Row Spacing

	50 Gallons Per Acre									55 Gallons Per Acre								
Speed (MPH)	4	5	6	7	8	9	10	11	12	4	5	6	7	8	9	10	11	12
#10 Injector (psi)	24	33	47	56	68	79	93	103	115	29	39	54	64	77	89	104	115	129
#15 Injector (psi)	10	16	24	31	40	46	54	61	70	13	19	29	36	46	53	61	69	79
#20 Injector (psi)	2	6	13	18	24	29	36	41	47	4	9	17	22	29	34	41	47	54
#30 Injector (psi)			2	5	10	13	17	20	24			4	8	13	16	21	25	29
#40 Injector (psi)					2	4	7	10	13					4	7	10	13	17
GPM (per nozzle)	0.86	1.07	1.29	1.50	1.72	1.93	2.15	2.36	2.58	0.95	1.18	1.42	1.66	1.89	2.13	2.36	2.60	2.84
Flow Indicator 1/2" SS Level	2.4	3.1	3.9	4.6	5.3	6.1	6.8			2.7	3.5	4.3	5.1	5.9	6.7			
Flow Indicator 7/16" SS Ball	0.3	0.9	1.4	2.0	2.5	3.1	3.7	4.2	4.8	0.5	1.1	1.8	2.4	3.0	3.6	4.2	4.8	5.5

	60 Gallons Per Acre									65 Gallons Per Acre								
Speed (MPH)	4	5	6	7	8	9	10	11	12	4	5	6	7	8	9	10	11	12
#10 Injector (psi)	33	44	60	71	86	99	115	128	143	38	50	67	79	94	109	127	140	156
#15 Injector (psi)	16	23	33	41	53	60	69	78	88	19	26	38	47	59	67	76	86	97
#20 Injector (psi)	6	12	20	26	33	39	47	53	60	8	14	23	30	38	44	53	59	67
#30 Injector (psi)		1	6	10	16	20	25	29	33		3	8	13	19	23	29	33	38
#40 Injector (psi)				2	6	9	13	16	20			1	4	8	12	16	19	23
GPM (per nozzle)	1.03	1.29	1.55	1.81	2.06	2.32	2.58	2.84	3.10	1.12	1.40	1.68	1.96	2.24	2.52	2.79	3.07	3.35
Flow Indicator 1/2" SS Level	3.0	3.9	4.7	5.6	6.5					3.3	4.2	5.2	6.1					
Flow Indicator 7/16" SS Ball	0.7	1.4	2.1	2.8	3.4	4.1	4.8	5.5	6.1	1.0	1.7	2.4	3.2	3.9	4.6	5.3	6.1	6.8

	70 Gallons Per Acre									75 Gallons Per Acre								
Speed (MPH)	4	5	6	7	8	9	10	11	12	4	5	6	7	8	9	10	11	12
#10 Injector (psi)	42	55	74	87	103	118	138	152	170	47	60	80	94	112	128	149	165	184
#15 Injector (psi)	22	30	42	52	65	74	84	94	106	25	34	47	57	71	80	91	102	115
#20 Injector (psi)	11	17	27	33	42	49	58	65	74	13	20	30	37	47	54	64	71	80
#30 Injector (psi)	1	5	11	15	22	26	32	37	42	2	6	13	18	25	30	36	41	47
#40 Injector (psi)			3	6	11	14	19	22	27			5	8	13	17	22	26	30
GPM (per nozzle)	1.20	1.50	1.81	2.11	2.41	2.71	3.01	3.31	3.61	1.29	1.61	1.93	2.26	2.58	2.90	3.22	3.55	3.87
Flow Indicator 1/2" SS Level	3.6	4.6	5.6	6.6						3.9	5.0	6.1						
Flow Indicator 7/16" SS Ball	1.2	2.0	2.8	3.5	4.3	5.1	5.9	6.7		1.4	2.3	3.1	3.9	4.8	5.6	6.5		

NOTE - The values highlighted in green indicate pressures that are in the optimal pressure range of 20 - 50 psi. The row spacing is 20 inches.

Description	Part. No.
#10 NitroGro Injector	JM0036459
#15 NitroGro Injector	JM0036460
#20 NitroGro Injector	JM0036462
#30 NitroGro Injector	JM0036463
#40 NitroGro Injector	JM0036464

Injectors - 22" Row Spacing

	15 Gallons Per Acre								
Speed (MPH)	4	5	6	7	8	9	10	11	12
#10 Injector (psi)			2	5	9	12	17	20	24
#15 Injector (psi)						1	4	7	9
#20 Injector (psi)									2
#30 Injector (psi)									
#40 Injector (psi)									
GPM (per nozzle)	0.25	0.31	0.38	0.44	0.50	0.57	0.63	0.69	0.75
Flow Indicator Red Glass Level	1.1	1.7	2.2	2.8	3.3	3.8	4.4	4.9	5.5
Flow Indicator 1/2" SS Level	0.3	0.5	0.7	1.0	1.2	1.4	1.6	1.8	2.0

Description	Part. No.
#10 NitroGro Injector	JM0036459
#15 NitroGro Injector	JM0036460
#20 NitroGro Injector	JM0036462
#30 NitroGro Injector	JM0036463
#40 NitroGro Injector	JM0036464

	20 Gallons Per Acre									25 Gallons Per Acre								
Speed (MPH)	4	5	6	7	8	9	10	11	12	4	5	6	7	8	9	10	11	12
#10 Injector (psi)		3	9	13	19	23	29	34	39	4	9	17	22	28	34	41	47	54
#15 Injector (psi)				2	5	8	12	15	19			4	7	12	16	21	24	29
#20 Injector (psi)						1	4	7	9					4	7	10	13	17
#30 Injector (psi)																	2	4
#40 Injector (psi)																		
GPM (per nozzle)	0.38	0.47	0.57	0.66	0.76	0.85	0.95	1.04	1.14	0.47	0.59	0.71	0.83	0.95	1.06	1.18	1.30	1.42
Flow Indicator 1/2" SS Level	0.8	1.1	1.4	1.7	2.0	2.4	2.7	3.0	3.3	1.1	1.5	1.9	2.3	2.7	3.1	3.5	3.9	4.3
Flow Indicator 7/16" SS Ball					0.0	0.3	0.5	0.8	1.0				0.2	0.5	0.8	1.1	1.4	1.8

	30 Gallons Per Acre									35 Gallons Per Acre								
Speed (MPH)	4	5	6	7	8	9	10	11	12	4	5	6	7	8	9	10	11	12
#10 Injector (psi)	9	15	24	30	38	45	54	61	69	14	21	31	39	48	56	66	74	84
#15 Injector (psi)		3	9	13	19	23	29	33	39	3	7	14	19	26	31	37	42	49
#20 Injector (psi)			2	5	9	12	17	20	24			5	9	14	18	23	27	31
#30 Injector (psi)						1	4	6	9					3	5	8	11	14
#40 Injector (psi)									2							1	3	5
GPM (per nozzle)	0.57	0.71	0.85	0.99	1.14	1.28	1.42	1.56	1.70	0.66	0.83	0.99	1.16	1.32	1.49	1.66	1.82	1.99
Flow Indicator 1/2" SS Level	1.4	1.9	2.4	2.8	3.3	3.8	4.3	4.8	5.3	1.7	2.3	2.8	3.4	4.0	4.5	5.1	5.7	6.2
Flow Indicator 7/16" SS Ball			0.3	0.6	1.0	1.4	1.8	2.1	2.5		0.2	0.6	1.1	1.5	1.9	2.4	2.8	3.2

NOTES:

- The values highlighted in green indicate pressures that are in the optimal pressure range of 20 - 50 psi. The row spacing is 22 inches.
- Density or viscosity of the liquid can effect operating range.
- A displayed pressure higher than the calculated pressure may be due to a pressure drop in the fertilizer hoses.
- With #10 on the center, use #15 for one and a half rate outside, (11 or 15 knife).
- With #15 on the center, use #8 for half rate outside, (13 or 17 knife), and #20 for one and a half rate outside, (11 or 15 knife).
- With #20 on the center, use #10 for half rate outside, (13 or 17 knife), and #30 for one and a half rate outside, (11 or 15 knife).
- With #30 on the center, use #15 for half rate outside, (13 or 17 knife).
- With #40 on the center, use #20 for half rate outside, (13 or 17 knife), and #60 for one and a half rate outside, (11 or 15 knife).

Injectors - 22” Row Spacing

	40 Gallons Per Acre									45 Gallons Per Acre								
Speed (MPH)	4	5	6	7	8	9	10	11	12	4	5	6	7	8	9	10	11	12
#10 Injector (psi)	19	27	39	47	57	67	79	88	99	24	33	46	55	67	78	91	102	114
#15 Injector (psi)	6	11	19	25	33	38	45	51	59	9	15	24	30	40	46	53	60	69
#20 Injector (psi)		3	9	13	19	23	29	34	39	1	6	13	18	24	29	35	40	46
#30 Injector (psi)				2	6	9	12	15	19			1	5	9	12	17	20	24
#40 Injector (psi)						1	4	6	9					1	4	7	10	13
GPM (per nozzle)	0.76	0.95	1.14	1.32	1.51	1.70	1.89	2.08	2.27	0.85	1.06	1.28	1.49	1.70	1.92	2.13	2.34	2.55
Flow Indicator 1/2" SS Level	2.0	2.7	3.3	4.0	4.6	5.3	5.9	6.6		2.4	3.1	3.8	4.5	5.3	6.0	6.7		
Flow Indicator 7/16" SS Ball		0.5	1.0	1.5	2.0	2.5	3.0	3.5	4.0	0.3	0.8	1.4	1.9	2.5	3.0	3.6	4.2	4.7

	50 Gallons Per Acre									55 Gallons Per Acre								
Speed (MPH)	4	5	6	7	8	9	10	11	12	4	5	6	7	8	9	10	11	12
#10 Injector (psi)	29	39	54	64	77	89	104	115	129	34	45	61	72	87	100	116	129	144
#15 Injector (psi)	13	19	29	36	46	53	61	69	79	16	23	34	42	53	61	70	78	89
#20 Injector (psi)	4	9	17	22	29	34	41	47	54	6	12	20	26	34	40	48	54	61
#30 Injector (psi)			4	8	13	16	21	25	29		1	6	10	16	20	25	29	34
#40 Injector (psi)					4	7	10	13	17				3	6	9	13	16	20
GPM (per nozzle)	0.95	1.18	1.42	1.66	1.89	2.13	2.36	2.60	2.84	1.04	1.30	1.56	1.82	2.08	2.34	2.60	2.86	3.12
Flow Indicator 1/2" SS Level	2.7	3.5	4.3	5.1	5.9	6.7				3.0	3.9	4.8	5.7	6.6				
Flow Indicator 7/16" SS Ball	0.5	1.1	1.8	2.4	3.0	3.6	4.2	4.8	5.5	0.8	1.4	2.1	2.8	3.5	4.2	4.8	5.5	6.2

	60 Gallons Per Acre									65 Gallons Per Acre								
Speed (MPH)	4	5	6	7	8	9	10	11	12	4	5	6	7	8	9	10	11	12
#10 Injector (psi)	39	51	68	80	96	110	129	143	159	44	57	76	89	106	121	141	156	174
#15 Injector (psi)	19	27	39	48	60	68	78	87	99	23	31	44	53	67	76	86	96	109
#20 Injector (psi)	9	15	24	30	39	45	54	60	68	11	18	28	35	44	51	60	67	76
#30 Injector (psi)		3	9	13	19	24	29	34	39	1	5	11	16	23	27	34	38	44
#40 Injector (psi)			2	5	9	12	16	20	24			4	7	11	15	20	23	28
GPM (per nozzle)	1.14	1.42	1.70	1.99	2.27	2.55	2.84	3.12	3.41	1.23	1.54	1.84	2.15	2.46	2.77	3.07	3.38	3.69
Flow Indicator 1/2" SS Level	3.3	4.3	5.3	6.2						3.7	4.7	5.7	6.8					
Flow Indicator 7/16" SS Ball	1.0	1.8	2.5	3.2	4.0	4.7	5.5	6.2	6.9	1.3	2.1	2.9	3.7	4.5	5.3	6.1	6.9	

	70 Gallons Per Acre									75 Gallons Per Acre								
Speed (MPH)	4	5	6	7	8	9	10	11	12	4	5	6	7	8	9	10	11	12
#10 Injector (psi)	49	63	83	97	116	132	154	170	189	54	68	91	106	125	143	166	183	204
#15 Injector (psi)	26	35	49	59	74	83	94	105	119	29	39	54	65	81	91	102	114	129
#20 Injector (psi)	14	21	32	39	49	56	66	74	83	16	24	35	43	54	62	72	81	91
#30 Injector (psi)	3	7	14	19	26	31	38	43	49	4	9	16	22	29	35	42	47	54
#40 Injector (psi)			5	9	14	18	23	27	32		2	7	11	16	21	26	30	35
GPM (per nozzle)	1.32	1.66	1.99	2.32	2.65	2.98	3.31	3.64	3.97	1.42	1.77	2.13	2.48	2.84	3.19	3.55	3.90	4.26
Flow Indicator 1/2" SS Level	4.0	5.1	6.2							4.3	5.5	6.7						
Flow Indicator 7/16" SS Ball	1.5	2.4	3.2	4.1	5.0	5.8	6.7			1.8	2.7	3.6	4.5	5.5	6.4			

NOTE - The values highlighted in green indicate pressures that are in the optimal pressure range of 20 - 50 psi. The row spacing is 22 inches.

Injectors - 30" Row Spacing

	15 Gallons Per Acre								
Speed (MPH)	4	5	6	7	8	9	10	11	12
#10 Injector (psi)		4	10	14	20	24	30	35	40
#15 Injector (psi)				2	6	9	13	16	20
#20 Injector (psi)						2	5	7	10
#30 Injector (psi)									
#40 Injector (psi)									
GPM (per nozzle)	0.34	0.43	0.51	0.60	0.68	0.77	0.86	0.94	1.03
Flow Indicator Red Glass Level	1.9	2.7	3.4	4.1	4.9	5.6	6.4		
Flow Indicator 1/2" SS Level	0.6	0.9	1.2	1.5	1.8	2.1	2.4	2.7	3.0
Flow Indicator 7/16" SS Ball						0.1	0.3	0.5	0.7

Description	Part. No.
#10 NitroGro Injector	JM0036459
#15 NitroGro Injector	JM0036460
#20 NitroGro Injector	JM0036462
#30 NitroGro Injector	JM0036463
#40 NitroGro Injector	JM0036464

	20 Gallons Per Acre									25 Gallons Per Acre								
Speed (MPH)	4	5	6	7	8	9	10	11	12	4	5	6	7	8	9	10	11	12
#10 Injector (psi)	6	12	20	26	33	39	47	53	61	13	20	30	37	46	54	64	72	81
#15 Injector (psi)		1	6	10	15	19	24	29	34	2	6	13	18	25	30	35	41	47
#20 Injector (psi)				2	6	9	13	16	20			5	8	13	17	22	26	30
#30 Injector (psi)							1	4	6					2	4	7	10	13
#40 Injector (psi)																	2	5
GPM (per nozzle)	0.52	0.64	0.77	0.90	1.03	1.16	1.29	1.42	1.55	0.64	0.81	0.97	1.13	1.29	1.45	1.61	1.77	1.93
Flow Indicator 1/2" SS Level	1.2	1.7	2.1	2.5	3.0	3.4	3.9	4.3	4.7	1.7	2.2	2.8	3.3	3.9	4.4	5.0	5.5	6.1
Flow Indicator 7/16" SS Ball			0.1	0.4	0.7	1.1	1.4	1.8	2.1		0.2	0.6	1.0	1.4	1.8	2.3	2.7	3.1

	30 Gallons Per Acre									35 Gallons Per Acre								
Speed (MPH)	4	5	6	7	8	9	10	11	12	4	5	6	7	8	9	10	11	12
#10 Injector (psi)	20	28	40	48	59	69	81	90	102	27	36	50	60	72	84	98	109	122
#15 Injector (psi)	7	12	20	26	36	40	47	53	61	11	17	27	34	43	50	58	65	75
#20 Injector (psi)		3	10	14	20	24	30	35	40	3	8	15	20	27	32	39	44	50
#30 Injector (psi)				2	7	9	13	16	20			3	6	11	15	19	22	27
#40 Injector (psi)						2	4	7	10					3	5	9	11	15
GPM (per nozzle)	0.77	0.97	1.16	1.35	1.55	1.74	1.93	2.13	2.32	0.90	1.13	1.35	1.58	1.81	2.03	2.26	2.48	2.71
Flow Indicator 1/2" SS Level	2.1	2.8	3.4	4.1	4.7	5.4	6.1	6.7		2.5	3.3	4.1	4.8	5.6	6.4			
Flow Indicator 7/16" SS Ball	0.1	0.6	1.1	1.6	2.1	2.6	3.1	3.6	4.1	0.4	1.0	1.6	2.2	2.8	3.4	3.9	4.5	5.1

NOTES:

- The values highlighted in green indicate pressures that are in the optimal pressure range of 20 - 50 psi. The row spacing is 30 inches.
- Density or viscosity of the liquid can effect operating range.
- A displayed pressure higher than the calculated pressure may be due to a pressure drop in the fertilizer hoses.
- With #10 on the center, use #15 for one and a half rate outside, (11 or 15 knife).
- With #15 on the center, use #8 for half rate outside, (13 or 17 knife), and #20 for one and a half rate outside, (11 or 15 knife).
- With #20 on the center, use #10 for half rate outside, (13 or 17 knife), and #30 for one and a half rate outside, (11 or 15 knife).
- With #30 on the center, use #15 for half rate outside, (13 or 17 knife).
- With #40 on the center, use #20 for half rate outside, (13 or 17 knife), and #60 for one and a half rate outside, (11 or 15 knife).

Injectors - 30" Row Spacing

	40 Gallons Per Acre									45 Gallons Per Acre								
Speed (MPH)	4	5	6	7	8	9	10	11	12	4	5	6	7	8	9	10	11	12
#10 Injector (psi)	33	44	60	71	86	99	115	128	143	40	52	70	83	99	113	132	146	163
#15 Injector (psi)	16	23	33	41	53	60	69	78	88	20	28	40	49	62	70	80	90	102
#20 Injector (psi)	6	12	20	26	33	39	47	53	60	10	16	25	32	40	47	55	62	70
#30 Injector (psi)		1	6	10	16	20	25	29	33		4	10	14	20	25	31	35	40
#40 Injector (psi)				2	6	9	13	16	20			2	5	10	13	17	21	25
GPM (per nozzle)	1.03	1.29	1.55	1.81	2.06	2.32	2.58	2.84	3.10	1.16	1.45	1.74	2.03	2.32	2.61	2.90	3.19	3.48
Flow Indicator 1/2" SS Level	3.0	3.9	4.7	5.6	6.5					3.4	4.4	5.4	6.4					
Flow Indicator 7/16" SS Ball	0.7	1.4	2.1	2.8	3.4	4.1	4.8	5.5	6.1	1.1	1.8	2.6	3.4	4.1	4.9	5.6	6.4	

	50 Gallons Per Acre									55 Gallons Per Acre								
Speed (MPH)	4	5	6	7	8	9	10	11	12	4	5	6	7	8	9	10	11	12
#10 Injector (psi)	47	60	80	94	112	128	149	165	184	54	68	91	106	125	143	166	183	204
#15 Injector (psi)	25	34	47	57	71	80	91	102	115	29	39	54	65	81	91	102	114	129
#20 Injector (psi)	13	20	30	37	47	54	64	71	80	16	24	35	43	54	62	72	81	91
#30 Injector (psi)	2	6	13	18	25	30	36	41	47	4	9	16	22	29	35	42	47	54
#40 Injector (psi)			5	8	13	17	22	26	30		2	7	11	16	21	26	30	35
GPM (per nozzle)	1.29	1.61	1.93	2.26	2.58	2.90	3.22	3.55	3.87	1.42	1.77	2.13	2.48	2.84	3.19	3.55	3.90	4.26
Flow Indicator 1/2" SS Level	3.9	5.0	6.1							4.3	5.5	6.7						
Flow Indicator 7/16" SS Ball	1.4	2.3	3.1	3.9	4.8	5.6	6.5			1.8	2.7	3.6	4.5	5.5	6.4			

	60 Gallons Per Acre									65 Gallons Per Acre								
Speed (MPH)	4	5	6	7	8	9	10	11	12	4	5	6	7	8	9	10	11	12
#10 Injector (psi)	60	77	101	117	138	158	183	202	224	67	85	111	128	152	173	200	221	245
#15 Injector (psi)	34	45	60	73	90	101	113	127	142	38	50	67	81	100	111	124	139	156
#20 Injector (psi)	20	28	40	49	60	69	81	90	101	23	32	46	55	67	77	89	99	111
#30 Injector (psi)	7	12	20	26	34	40	48	54	60	9	15	23	30	38	45	54	60	67
#40 Injector (psi)		4	10	14	20	24	30	35	40	1	6	12	17	23	28	34	40	46
GPM (per nozzle)	1.55	1.93	2.32	2.71	3.10	3.48	3.87	4.26	4.64	1.68	2.10	2.52	2.93	3.35	3.77	4.19	4.61	5.03
Flow Indicator 1/2" SS Level	4.7	6.1																
Flow Indicator 7/16" SS Ball	2.1	3.1	4.1	5.1	6.1					2.4	3.5	4.6	5.7	6.8				

	70 Gallons Per Acre									75 Gallons Per Acre								
Speed (MPH)	4	5	6	7	8	9	10	11	12	4	5	6	7	8	9	10	11	12
#10 Injector (psi)	74	93	121	140	165	188	217	239	265	81	101	131	151	178	203	234	258	286
#15 Injector (psi)	43	55	74	89	109	121	136	151	170	48	61	81	96	118	131	147	163	183
#20 Injector (psi)	27	36	51	61	74	84	98	108	121	30	40	56	67	81	92	106	117	131
#30 Injector (psi)	11	17	27	34	43	50	60	66	74	13	20	30	38	48	55	66	73	81
#40 Injector (psi)	3	8	15	20	27	32	39	44	51	5	10	18	23	30	36	43	49	56
GPM (per nozzle)	1.81	2.26	2.71	3.16	3.61	4.06	4.51	4.97	5.42	1.93	2.42	2.90	3.39	3.87	4.35	4.84	5.32	5.80
Flow Indicator 7/16" SS Ball	2.8	3.9	5.1	6.3						3.1	4.4	5.6	6.9					

NOTE - The values highlighted in green indicate pressures that are in the optimal pressure range of 20 - 50 psi. The row spacing is 30 inches.

Knife - 20" Row Spacing

	10 Gallons Per Acre									15 Gallons Per Acre								
Speed (MPH)	4	5	6	7	8	9	10	11	12	4	5	6	7	8	9	10	11	12
0.075 Orifice Pressure (psi)				3	6	10	13	17	20		5	10	15	20	25	31	36	41
0.107 Orifice Pressure (psi)																2	4	7
0.132 Orifice Pressure (psi)																		
0.161 Orifice Pressure (psi)																		
GPM (per nozzle)	0.15	0.19	0.23	0.27	0.30	0.34	0.38	0.42	0.46	0.23	0.29	0.34	0.40	0.46	0.51	0.57	0.63	0.68
Flow Indicator Red Glass Level	0.3	0.6	0.9	1.3	1.6	1.9	2.2	2.6	2.9	0.9	1.4	1.9	2.4	2.9	3.4	3.9	4.4	4.9
Flow Indicator 1/2" SS Level		0.1	0.2	0.4	0.5	0.6	0.8	0.9	1.0	0.2	0.4	0.6	0.8	1.0	1.2	1.4	1.6	1.8

	20 Gallons Per Acre									25 Gallons Per Acre								
Speed (MPH)	4	5	6	7	8	9	10	11	12	4	5	6	7	8	9	10	11	12
0.075 Orifice Pressure (psi)	6	13	20	27	34	41	48	55	62	13	22	31	39	48	57	65	74	82
0.107 Orifice Pressure (psi)					4	7	10	14	17				6	10	15	19	23	27
0.132 Orifice Pressure (psi)									5						3	6	9	12
0.161 Orifice Pressure (psi)																		
GPM (per nozzle)	0.30	0.38	0.46	0.53	0.61	0.68	0.76	0.84	0.91	0.38	0.48	0.57	0.67	0.76	0.86	0.95	1.05	1.14
Flow Indicator Red Glass Level	1.6	2.2	2.9	3.6	4.2	4.9	5.5	6.2	6.9	2.2	3.1	3.9	4.7	5.5	6.4			
Flow Indicator 1/2" SS Level	0.5	0.8	1.0	1.3	1.5	1.8	2.1	2.3	2.6	0.8	1.1	1.4	1.7	2.1	2.4	2.7	3.0	3.3
Flow Indicator 7/16" SS Ball								0.2	0.4						0.3	0.5	0.8	1.0

	30 Gallons Per Acre									35 Gallons Per Acre								
Speed (MPH)	4	5	6	7	8	9	10	11	12	4	5	6	7	8	9	10	11	12
0.075 Orifice Pressure (psi)	20	31	41	51	62	72	82	93	103	27	39	51	63	76	88	100	112	124
0.107 Orifice Pressure (psi)		2	7	12	17	22	27	32	37		6	12	18	24	30	36	42	48
0.132 Orifice Pressure (psi)					5	8	12	15	18				6	9	13	17	21	25
0.161 Orifice Pressure (psi)								3	5							5	7	10
GPM (per nozzle)	0.46	0.57	0.68	0.80	0.91	1.03	1.14	1.26	1.37	0.53	0.67	0.80	0.93	1.07	1.20	1.33	1.46	1.60
Flow Indicator Red Glass Level	2.9	3.9	4.9	5.9	6.9													
Flow Indicator 1/2" SS Level	1.0	1.4	1.8	2.2	2.6	3.0	3.3	3.7	4.1	1.3	1.7	2.2	2.6	3.1	3.5	4.0	4.5	4.9
Flow Indicator 7/16" SS Ball				0.1	0.4	0.7	1.0	1.3	1.6			0.1	0.5	0.8	1.2	1.5	1.9	2.2

NOTES:

- Values highlighted in green indicate pressures that are within the optimal range of 20 - 50 psi. The row spacing is 20 inches.
- Density or viscosity of the liquid can effect operating range.
- A displayed pressure higher than the calculated pressure may be due to a pressure drop in the fertilizer hoses.
- With .075 on the center, use .054 for half rate outside (13 or 17 knife), and .093 for one and a half rate outside, (11 or 15 knife).
- With .107 on the center, use .075 for half rate outside (13 or 17 knife), and .132 for one and a half rate outside, (11 or 15 knife).
- With .132 on the center, use .093 for half rate outside (13 or 17 knife), and .161 for one and a half rate outside, (11 or 15 knife).
- With .161 on the center, use .107 for half rate outside (13 or 17 knife), and .196 for one and a half rate outside, (11 or 15 knife).

Kit	**0.054**	**0.075**	**0.093**	**0.107**	**0.132**	**0.162**
11 Knife	0	9	2	9	9	2
13 Knife	2	11	2	11	11	0
15 Knife	0	13	2	13	13	2
17 Knife	2	15	2	15	15	0

Description	Part. No.
.054 Orifice	JM0036373
.075 Orifice	JM0036374
.093 Orifice	JM0036375
.107 Orifice	JM0036376
.132 Orifice	JM0036377
.162 Orifice	JM0036378

Knife - 20” Row Spacing

	40 Gallons Per Acre									45 Gallons Per Acre								
Speed (MPH)	4	5	6	7	8	9	10	11	12	4	5	6	7	8	9	10	11	12
0.075 Orifice Pressure (psi)	34	48	62	76	89	103	117	131	145	41	57	72	88	103	119	134	150	165
0.107 Orifice Pressure (psi)	4	10	17	24	31	37	44	51	58	7	15	22	30	37	45	53	60	68
0.132 Orifice Pressure (psi)			5	9	14	18	23	27	31		3	8	13	18	23	28	33	38
0.161 Orifice Pressure (psi)						5	8	11	14					5	9	12	15	18
GPM (per nozzle)	0.61	0.76	0.91	1.07	1.22	1.37	1.52	1.67	1.83	0.68	0.86	1.03	1.20	1.37	1.54	1.71	1.88	2.05
Flow Indicator 1/2" SS Level	1.5	2.1	2.6	3.1	3.6	4.1	4.6	5.2	5.7	1.8	2.4	3.0	3.5	4.1	4.7	5.3	5.9	6.5
Flow Indicator 7/16" SS Ball			0.4	0.8	1.2	1.6	2.0	2.4	2.8		0.3	0.7	1.2	1.6	2.1	2.5	3.0	3.4

	50 Gallons Per Acre									55 Gallons Per Acre								
Speed (MPH)	4	5	6	7	8	9	10	11	12	4	5	6	7	8	9	10	11	12
0.075 Orifice Pressure (psi)	48	65	82	100	117	134	152	169	186	55	74	93	112	131	150	169	188	207
0.107 Orifice Pressure (psi)	10	19	27	36	44	53	61	70	78	14	23	32	42	51	60	70	79	88
0.132 Orifice Pressure (psi)		6	12	17	23	28	33	39	44		9	15	21	27	33	39	45	51
0.161 Orifice Pressure (psi)				5	8	12	16	19	23			3	7	11	15	19	23	27
GPM (per nozzle)	0.76	0.95	1.14	1.33	1.52	1.71	1.90	2.09	2.28	0.84	1.05	1.26	1.46	1.67	1.88	2.09	2.30	2.51
Flow Indicator 1/2" SS Level	2.1	2.7	3.3	4.0	4.6	5.3	5.9	6.6		2.3	3.0	3.7	4.5	5.2	5.9	6.6		
Flow Indicator 7/16" SS Ball	0.0	0.5	1.0	1.5	2.0	2.5	3.0	3.5	4.0	0.2	0.8	1.3	1.9	2.4	3.0	3.5	4.1	4.6

	60 Gallons Per Acre									65 Gallons Per Acre								
Speed (MPH)	4	5	6	7	8	9	10	11	12	4	5	6	7	8	9	10	11	12
0.075 Orifice Pressure (psi)	62	82	103	124	145	165	186	207	228	69	91	114	136	158	181	203	226	248
0.107 Orifice Pressure (psi)	17	27	37	48	58	68	78	88	99	21	32	43	54	65	76	87	98	109
0.132 Orifice Pressure (psi)	5	12	18	25	31	38	44	51	58	7	14	21	29	36	43	50	57	64
0.161 Orifice Pressure (psi)			5	10	14	18	23	27	32			7	12	17	22	27	31	36
GPM (per nozzle)	0.91	1.14	1.37	1.60	1.83	2.05	2.28	2.51	2.74	0.99	1.24	1.48	1.73	1.98	2.23	2.47	2.72	2.97
Flow Indicator 1/2" SS Level	2.6	3.3	4.1	4.9	5.7	6.5				2.8	3.7	4.5	5.4	6.2				
Flow Indicator 7/16" SS Ball	0.4	1.0	1.6	2.2	2.8	3.4	4.0	4.6	5.2	0.6	1.3	1.9	2.6	3.2	3.9	4.5	5.1	5.8

	70 Gallons Per Acre									75 Gallons Per Acre								
Speed (MPH)	4	5	6	7	8	9	10	11	12	4	5	6	7	8	9	10	11	12
0.075 Orifice Pressure (psi)	76	100	124	148	172	196	221	245	269	82	108	134	160	186	212	238	264	290
0.107 Orifice Pressure (psi)	24	36	48	60	71	83	95	107	119	27	40	53	66	78	91	104	116	129
0.132 Orifice Pressure (psi)	9	17	25	32	40	48	55	63	71	12	20	28	36	44	53	61	69	77
0.161 Orifice Pressure (psi)		5	10	15	20	25	30	35	40		6	12	17	23	28	34	39	45
GPM (per nozzle)	1.07	1.33	1.60	1.86	2.13	2.40	2.66	2.93	3.20	1.14	1.43	1.71	2.00	2.28	2.57	2.85	3.14	3.42
Flow Indicator 1/2" SS Level	3.1	4.0	4.9	5.8	6.7					3.3	4.3	5.3	5.3	6.3				
Flow Indicator 7/16" SS Ball	0.8	1.5	2.2	2.9	3.6	4.3	5.0	5.7	6.4	1.0	1.8	2.5	3.3	4.0	4.7	5.5	6.2	7.0

NOTE - The values highlighted in green indicate pressures that are in the optimal pressure range of 20 - 50 psi. The row spacing is 20 inches.

Knife - 22" Row Spacing

	10 Gallons Per Acre									15 Gallons Per Acre								
Speed (MPH)	4	5	6	7	8	9	10	11	12	4	5	6	7	8	9	10	11	12
0.075 Orifice Pressure (psi)			2	5	9	13	17	21	24	2	7	13	19	24	30	36	41	47
0.107 Orifice Pressure (psi)															2	4	7	10
0.132 Orifice Pressure (psi)																		
0.161 Orifice Pressure (psi)																		
GPM (per nozzle)	0.17	0.21	0.25	0.29	0.33	0.38	0.42	0.46	0.50	0.25	0.31	0.38	0.44	0.50	0.57	0.63	0.69	0.75
Flow Indicator Red Glass Level	0.4	0.8	1.1	1.5	1.8	2.2	2.6	2.9	3.3	1.1	1.7	2.2	2.8	3.3	3.8	4.4	4.9	5.5
Flow Indicator 1/2" SS Level		0.2	0.3	0.5	0.6	0.7	0.9	1.0	1.2	0.3	0.5	0.7	1.0	1.2	1.4	1.6	1.8	2.0

	20 Gallons Per Acre									25 Gallons Per Acre								
Speed (MPH)	4	5	6	7	8	9	10	11	12	4	5	6	7	8	9	10	11	12
0.075 Orifice Pressure (psi)	9	17	24	32	40	47	55	62	70	17	26	36	45	55	64	74	83	93
0.107 Orifice Pressure (psi)					6	10	14	17	21			4	9	14	18	23	28	32
0.132 Orifice Pressure (psi)								5	8					3	6	9	12	15
0.161 Orifice Pressure (psi)																		3
GPM (per nozzle)	0.33	0.42	0.50	0.59	0.67	0.75	0.84	0.92	1.00	0.42	0.52	0.63	0.73	0.84	0.94	1.05	1.15	1.26
Flow Indicator Red Glass Level	1.8	2.6	3.3	4.0	4.8	5.5	6.2	6.9	7.7	2.6	3.5	4.4	5.3	6.2				
Flow Indicator 1/2" SS Level	0.6	0.9	1.2	1.5	1.7	2.0	2.3	2.6	2.9	0.9	1.2	1.6	2.0	2.3	2.7	3.0	3.4	3.7
Flow Indicator 7/16" SS Ball							0.2	0.5	0.7					0.2	0.5	0.8	1.1	1.3

	30 Gallons Per Acre									35 Gallons Per Acre								
Speed (MPH)	4	5	6	7	8	9	10	11	12	4	5	6	7	8	9	10	11	12
0.075 Orifice Pressure (psi)	24	36	47	59	70	81	93	104	116	32	45	59	72	85	98	112	125	138
0.107 Orifice Pressure (psi)		4	10	16	21	27	32	38	44		9	16	22	29	35	42	48	55
0.132 Orifice Pressure (psi)				4	8	11	15	18	22			4	8	12	17	21	25	29
0.161 Orifice Pressure (psi)							3	5	8						4	7	10	13
GPM (per nozzle)	0.50	0.63	0.75	0.88	1.00	1.13	1.26	1.38	1.51	0.59	0.73	0.88	1.03	1.17	1.32	1.46	1.61	1.76
Flow Indicator Red Glass Level	3.3	4.4	5.5	6.6														
Flow Indicator 1/2" SS Level	1.2	1.6	2.0	2.5	2.9	3.3	3.7	4.2	4.6	1.5	2.0	2.5	3.0	3.5	4.0	4.5	5.0	5.4
Flow Indicator 7/16" SS Ball				0.3	0.7	1.0	1.3	1.7	2.0			0.3	0.7	1.1	1.5	1.9	2.3	2.6

NOTES:

- Values highlighted in green indicate pressures that are within the optimal range of 20 - 50 psi. The row spacing is 22 inches.
- Density or viscosity of the liquid can effect operating range.
- A displayed pressure higher than the calculated pressure may be due to a pressure drop in the fertilizer hoses.
- With .075 on the center, use .054 for half rate outside (13 or 17 knife), and .093 for one and a half rate outside, (11 or 15 knife).
- With .107 on the center, use .075 for half rate outside (13 or 17 knife), and .132 for one and a half rate outside, (11 or 15 knife).
- With .132 on the center, use .093 for half rate outside (13 or 17 knife), and .161 for one and a half rate outside, (11 or 15 knife).
- With .161 on the center, use .107 for half rate outside (13 or 17 knife), and .196 for one and a half rate outside, (11 or 15 knife).

Kit	**0.054**	**0.075**	**0.093**	**0.107**	**0.132**	**0.162**
11 Knife	0	9	2	9	9	2
13 Knife	2	11	2	11	11	0
15 Knife	0	13	2	13	13	2
17 Knife	2	15	2	15	15	0

Description	Part. No.
.054 Orifice	JM0036373
.075 Orifice	JM0036374
.093 Orifice	JM0036375
.107 Orifice	JM0036376
.132 Orifice	JM0036377
.162 Orifice	JM0036378

Knife - 22” Row Spacing

	40 Gallons Per Acre									45 Gallons Per Acre								
Speed (MPH)	4	5	6	7	8	9	10	11	12	4	5	6	7	8	9	10	11	12
0.075 Orifice Pressure (psi)	40	55	70	85	100	116	131	146	161	47	64	81	98	116	133	150	167	184
0.107 Orifice Pressure (psi)	6	14	21	29	36	44	51	59	66	10	18	27	35	44	52	60	69	77
0.132 Orifice Pressure (psi)			8	12	17	22	27	32	37		6	11	17	22	28	33	38	44
0.161 Orifice Pressure (psi)					5	8	11	14	18				4	8	12	15	19	22
GPM (per nozzle)	0.67	0.84	1.00	1.17	1.34	1.51	1.67	1.84	2.01	0.75	0.94	1.13	1.32	1.51	1.70	1.88	2.07	2.26
Flow Indicator 1/2" SS Level	1.7	2.3	2.9	3.5	4.0	4.6	5.2	5.7	6.3	2.0	2.7	3.3	4.0	4.6	5.2	5.9	6.5	
Flow Indicator 7/16" SS Ball		0.2	0.7	1.1	1.5	2.0	2.4	2.9	3.3		0.5	1.0	1.5	2.0	2.5	3.0	3.5	3.9

	50 Gallons Per Acre									55 Gallons Per Acre								
Speed (MPH)	4	5	6	7	8	9	10	11	12	4	5	6	7	8	9	10	11	12
0.075 Orifice Pressure (psi)	55	74	93	112	131	150	169	188	207	62	83	104	125	146	167	188	209	230
0.107 Orifice Pressure (psi)	14	23	32	42	51	60	70	79	88	17	28	38	48	59	69	79	89	100
0.132 Orifice Pressure (psi)		9	15	21	27	33	39	45	51	5	12	18	25	32	38	45	52	58
0.161 Orifice Pressure (psi)			3	7	11	15	19	23	27			5	10	14	19	23	28	32
GPM (per nozzle)	0.84	1.05	1.26	1.46	1.67	1.88	2.09	2.30	2.51	0.92	1.15	1.38	1.61	1.84	2.07	2.30	2.53	2.76
Flow Indicator 1/2" SS Level	2.3	3.0	3.7	4.5	5.2	5.9	6.6			2.6	3.4	4.2	5.0	5.7	6.5			
Flow Indicator 7/16" SS Ball	0.2	0.8	1.3	1.9	2.4	3.0	3.5	4.1	4.6	0.5	1.1	1.7	2.3	2.9	3.5	4.1	4.7	5.3

	60 Gallons Per Acre									65 Gallons Per Acre								
Speed (MPH)	4	5	6	7	8	9	10	11	12	4	5	6	7	8	9	10	11	12
0.075 Orifice Pressure (psi)	70	93	116	138	161	184	207	230	252	78	102	127	152	176	201	226	250	275
0.107 Orifice Pressure (psi)	21	32	44	55	66	77	88	100	111	25	37	49	61	73	86	98	110	122
0.132 Orifice Pressure (psi)	8	15	22	29	37	44	51	58	66	10	18	26	34	41	49	57	65	73
0.161 Orifice Pressure (psi)		3	8	13	18	22	27	32	37		5	10	16	21	26	31	37	42
GPM (per nozzle)	1.00	1.26	1.51	1.76	2.01	2.26	2.51	2.76	3.01	1.09	1.36	1.63	1.90	2.18	2.45	2.72	2.99	3.26
Flow Indicator 1/2" SS Level	2.9	3.7	4.6	5.4	6.3					3.2	4.1	5.0	5.9	6.9				
Flow Indicator 7/16" SS Ball	0.7	1.3	2.0	2.6	3.3	3.9	4.6	5.3	5.9	0.9	1.6	2.3	3.0	3.7	4.4	5.1	5.9	6.6

	70 Gallons Per Acre									75 Gallons Per Acre								
Speed (MPH)	4	5	6	7	8	9	10	11	12	4	5	6	7	8	9	10	11	12
0.075 Orifice Pressure (psi)	85	112	138	165	192	218	245	271	298	93	121	150	178	207	235	264	292	321
0.107 Orifice Pressure (psi)	29	42	55	68	81	94	107	120	133	32	46	60	74	88	102	116	130	144
0.132 Orifice Pressure (psi)	12	21	29	38	46	55	63	72	80	15	24	33	42	51	60	69	78	87
0.161 Orifice Pressure (psi)		7	13	18	24	30	35	41	47	3	9	15	21	27	33	39	45	51
GPM (per nozzle)	1.17	1.46	1.76	2.05	2.34	2.64	2.93	3.22	3.52	1.26	1.57	1.88	2.20	2.51	2.83	3.14	3.45	3.77
Flow Indicator 1/2" SS Level	3.5	4.5	5.4	6.4						3.7	4.8	5.9	6.9					
Flow Indicator 7/16" SS Ball	1.1	1.9	2.6	3.4	4.2	4.9	5.7	6.5		1.3	2.1	3.0	3.8	4.6	5.4	6.2		

NOTE - The values highlighted in green indicate pressures that are in the optimal pressure range of 20 - 50 psi. The row spacing is 22 inches.

Knife - 30" Row Spacing

	10 Gallons Per Acre									15 Gallons Per Acre								
Speed (MPH)	4	5	6	7	8	9	10	11	12	4	5	6	7	8	9	10	11	12
0.075 Orifice Pressure (psi)		5	10	15	20	25	31	36	41	10	18	25	33	41	49	57	64	72
0.107 Orifice Pressure (psi)							2	4	7				3	7	11	15	18	22
0.132 Orifice Pressure (psi)															1	3	6	8
0.161 Orifice Pressure (psi)																		
GPM (per nozzle)	0.23	0.29	0.34	0.40	0.46	0.51	0.57	0.63	0.68	0.34	0.43	0.51	0.60	0.68	0.77	0.86	0.94	1.03
Flow Indicator Red Glass Level	0.9	1.4	1.9	2.4	2.9	3.4	3.9	4.4	4.9	1.9	2.7	3.4	4.1	4.9	5.6	6.4		
Flow Indicator 1/2" SS Level	0.2	0.4	0.6	0.8	1.0	1.2	1.4	1.6	1.8	0.6	0.9	1.2	1.5	1.8	2.1	2.4	2.7	3.0
Flow Indicator 7/16" SS Ball															0.1	0.3	0.5	0.7

	20 Gallons Per Acre									25 Gallons Per Acre								
Speed (MPH)	4	5	6	7	8	9	10	11	12	4	5	6	7	8	9	10	11	12
0.075 Orifice Pressure (psi)	20	31	41	51	62	72	82	93	103	31	44	57	69	82	95	108	121	134
0.107 Orifice Pressure (psi)			7	12	17	22	27	32	37		8	15	21	27	34	40	46	53
0.132 Orifice Pressure (psi)					5	8	12	15	18			3	7	12	16	20	24	28
0.161 Orifice Pressure (psi)								3	5						4	6	9	12
GPM (per nozzle)	0.46	0.57	0.68	0.80	0.91	1.03	1.14	1.26	1.37	0.57	0.71	0.86	1.00	1.14	1.28	1.43	1.57	1.71
Flow Indicator Red Glass Level	2.9	3.9	4.9	5.9	6.9					3.9	5.1	6.4						
Flow Indicator 1/2" SS Level	1.0	1.4	1.8	2.2	2.6	3.0	3.3	3.7	4.1	1.4	1.9	2.4	2.9	3.3	3.8	4.3	4.8	5.3
Flow Indicator 7/16" SS Ball				0.1	0.4	0.7	1.0	1.3	1.6			0.3	0.7	1.0	1.4	1.8	2.1	2.5

	30 Gallons Per Acre									35 Gallons Per Acre								
Speed (MPH)	4	5	6	7	8	9	10	11	12	4	5	6	7	8	9	10	11	12
0.075 Orifice Pressure (psi)	41	57	72	88	103	119	134	150	165	51	69	88	106	124	142	160	178	196
0.107 Orifice Pressure (psi)	7	15	22	30	37	45	53	60	68	12	21	30	39	48	57	66	74	83
0.132 Orifice Pressure (psi)		3	8	13	18	23	28	33	38		7	13	19	25	30	36	42	48
0.161 Orifice Pressure (psi)					5	9	12	15	18				6	10	13	17	21	25
GPM (per nozzle)	0.68	0.86	1.03	1.20	1.37	1.54	1.71	1.88	2.05	0.80	1.00	1.20	1.40	1.60	1.80	2.00	2.20	2.40
Flow Indicator Red Glass Level	4.9	6.4																
Flow Indicator 1/2" SS Level	1.8	2.4	3.0	3.5	4.1	4.7	5.3	5.9	6.5	2.2	2.9	3.5	4.2	4.9	5.6	6.3	6.9	
Flow Indicator 7/16" SS Ball		0.3	0.7	1.2	1.6	2.1	2.5	3.0	3.4	0.1	0.7	1.2	1.7	2.2	2.7	3.3	3.8	4.3

NOTES:

- Values highlighted in green indicate pressures that are within the optimal range of 20 - 50 psi. The row spacing is 30 inches.
- Density or viscosity of the liquid can effect operating range.
- A displayed pressure higher than the calculated pressure may be due to a pressure drop in the fertilizer hoses.
- With .075 on the center, use .054 for half rate outside (13 or 17 knife), and .093 for one and a half rate outside, (11 or 15 knife).
- With .107 on the center, use .075 for half rate outside (13 or 17 knife), and .132 for one and a half rate outside, (11 or 15 knife).
- With .132 on the center, use .093 for half rate outside (13 or 17 knife), and .161 for one and a half rate outside, (11 or 15 knife).
- With .161 on the center, use .107 for half rate outside (13 or 17 knife), and .196 for one and a half rate outside, (11 or 15 knife).

Kit	**0.054**	**0.075**	**0.093**	**0.107**	**0.132**	**0.162**
11 Knife	0	9	2	9	9	2
13 Knife	2	11	2	11	11	0
15 Knife	0	13	2	13	13	2
17 Knife	2	15	2	15	15	0

Description	Part. No.
.054 Orifice	JM0036373
.075 Orifice	JM0036374
.093 Orifice	JM0036375
.107 Orifice	JM0036376
.132 Orifice	JM0036377
.162 Orifice	JM0036378

Knife - 30" Row Spacing

	40 Gallons Per Acre									45 Gallons Per Acre								
Speed (MPH)	4	5	6	7	8	9	10	11	12	4	5	6	7	8	9	10	11	12
0.075 Orifice Pressure (psi)	62	82	103	124	145	165	186	207	228	72	95	119	142	165	189	212	235	259
0.107 Orifice Pressure (psi)	17	27	37	48	58	68	78	88	99	22	34	45	57	68	80	91	102	114
0.132 Orifice Pressure (psi)	5	12	18	25	31	38	44	51	58	8	16	23	30	38	45	53	60	67
0.161 Orifice Pressure (psi)			5	10	14	18	23	27	32		4	9	13	18	23	28	33	38
GPM (per nozzle)	0.91	1.14	1.37	1.60	1.83	2.05	2.28	2.51	2.74	1.03	1.28	1.54	1.80	2.05	2.31	2.57	2.83	3.08
Flow Indicator 1/2" SS Level	2.6	3.3	4.1	4.9	5.7	6.5				3.0	3.8	4.7	5.6	6.5				
Flow Indicator 7/16" SS Ball	0.4	1.0	1.6	2.2	2.8	3.4	4.0	4.6	5.2	0.7	1.4	2.1	2.7	3.4	4.1	4.7	5.4	6.1

	50 Gallons Per Acre									55 Gallons Per Acre								
Speed (MPH)	4	5	6	7	8	9	10	11	12	4	5	6	7	8	9	10	11	12
0.075 Orifice Pressure (psi)	82	108	134	160	186	212	238	264	290	93	121	150	178	207	235	264	292	321
0.107 Orifice Pressure (psi)	27	40	53	66	78	91	104	116	129	32	46	60	74	88	102	116	130	144
0.132 Orifice Pressure (psi)	12	20	28	36	44	53	61	69	77	15	24	33	42	51	60	69	78	87
0.161 Orifice Pressure (psi)		6	12	17	23	28	34	39	45	3	9	15	21	27	33	39	45	51
GPM (per nozzle)	1.14	1.43	1.71	2.00	2.28	2.57	2.85	3.14	3.42	1.26	1.57	1.88	2.20	2.51	2.83	3.14	3.45	3.77
Flow Indicator 1/2" SS Level	3.3	4.3	5.3	6.3						3.7	4.8	5.9	6.9					
Flow Indicator 7/16" SS Ball	1.0	1.8	2.5	3.3	4.0	4.7	5.5	6.2	7.0	1.3	2.1	3.0	3.8	4.6	5.4	6.2		

	60 Gallons Per Acre									65 Gallons Per Acre								
Speed (MPH)	4	5	6	7	8	9	10	11	12	4	5	6	7	8	9	10	11	12
0.075 Orifice Pressure (psi)	103	134	165	196	228	259	290	321	352	114	147	181	215	248	282	316	349	383
0.107 Orifice Pressure (psi)	37	53	68	83	99	114	129	144	160	43	59	76	92	109	125	142	158	175
0.132 Orifice Pressure (psi)	18	28	38	48	58	67	77	87	97	21	32	43	53	64	75	86	96	107
0.161 Orifice Pressure (psi)	5	12	18	25	32	38	45	51	58	7	15	22	29	36	43	50	57	65
GPM (per nozzle)	1.37	1.71	2.05	2.40	2.74	3.08	3.42	3.77	4.11	1.48	1.85	2.23	2.60	2.97	3.34	3.71	4.08	4.45
Flow Indicator 1/2" SS Level	4.1	5.3	6.5															
Flow Indicator 7/16" SS Ball	1.6	2.5	3.4	4.3	5.2	6.1	7.0			1.9	2.9	3.9	4.8	5.8	6.8			

	70 Gallons Per Acre									75 Gallons Per Acre								
Speed (MPH)	4	5	6	7	8	9	10	11	12	4	5	6	7	8	9	10	11	12
0.075 Orifice Pressure (psi)	124	160	196	233	269	305	342	378	414	134	173	212	251	290	329	367	406	445
0.107 Orifice Pressure (psi)	48	66	83	101	119	137	155	172	190	53	72	91	110	129	148	167	186	206
0.132 Orifice Pressure (psi)	25	36	48	59	71	82	94	105	117	28	40	53	65	77	90	102	114	127
0.161 Orifice Pressure (psi)	10	17	25	33	40	48	56	64	71	12	20	28	37	45	53	61	70	78
GPM (per nozzle)	1.60	2.00	2.40	2.80	3.20	3.60	3.99	4.39	4.79	1.71	2.14	2.57	3.00	3.42	3.85	4.28	4.71	5.14
Flow Indicator 7/16" SS Ball	2.2	3.3	4.3	5.3	6.4					2.5	3.6	4.7	5.9	7.0				

NOTE - The values highlighted in green indicate pressures that are in the optimal pressure range of 20 - 50 psi. The row spacing is 30 inches.